CAME

CAME.COM

AUTOMATION FOR SWING DOOR

FA01490-EN

FLUO-SWS3 SPRING

ASSEMBLY AND INSTALLATION MANUAL

EN English

1. INTRODUCTION

Before you begin to install or start an automatic pedestrian doors, an inspection must be carried out on site by qualified personnel, for making measurements of the compartment wall, door and drive.
This inspection is to assess the risk and to select and implement the most appropriate solutions according to the type of pedestrian traffic (intense, narrow, one-way, bi-directional, etc..), The type of users (elderly, disabled, children, etc..), in the presence of potential hazards or local circumstances.
To assist installers in applying the requirements of European Standard EN 16005 concerning the safe use of automatic pedestrian doors, we recommend consulting the guides E.D.S.F. (European Door and Shutter Federation) available on www.edsf.com.

1.1 GENERAL SAFETY INSTRUCTION

This installation manual is intended for professionally competent personnel only. Before installing the product, carefully read the instructions. These instructions must be kept.
WARNING: Important safety instructions. Follow all instructions since incorrect installation can lead to severe injury.
The packaging materials (plastic, polystyrene, etc.) should not be discarded in the environment or left within reach of children, as these are a potential source of hazard.
Before installing the product, make sure it is in perfect condition. Do not install the product in an explosive environment and atmosphere: gas or inflammable fumes are a serious hazard risk.
Before installing the automations, make all structural changes relating to safety clearances and protection or segregation of all areas where there is risk of being crushed, cut or dragged, and danger areas in general.
Make sure the existing structure is up to standard in terms of strength and stability. CAME is not responsible for failure to use Good Working Methods in building the frames to be motorised or for any deformation occurring during use.
The safety devices (safety sensor, photocells, etc.) must be installed taking into account: applicable laws and directives, Good Working Methods, installation premises, system operating logic and the forces developed by the motorised door.
Apply hazard area notices required by applicable regulations.
The emission sound pressure level of the door is LpA ≤ 70dB(A).
Each installation must clearly show the identification details of the automatic pedestrian door.

1.2 EC MARKING AND EUROPEAN DIRECTIVES

Automations for swing pedestrian door, are designed and manufactured in compliance with the safety requirements of the European standard EN 16005 and are CE-marked in accordance with the Electromagnetic Compatibility Directive (2014/30/UE).
The automation also include a Declaration of Incorporation according to the Machinery Directive (2006/42/EC).
Pursuant to Machinery Directive (2006/42/CE) the installer who motorises a door or gate has the same obligations as the manufacturer of machinery and as such must:
- prepare the technical file which must contain the documents indicated in Annex V of the Machinery Directive; (The technical file must be kept and placed at the disposal of competent national authorities for at least ten years from the date of manufacture of the pedestrian door);
- draft the EC declaration of conformity in accordance with Annex ll-A of the Machinery Directive and deliver it to the customer;
- affix the CE marking on the power operated door in accordance with point 1.7.3 of Annex l of the Machinery

DICHIARAZIONE DI INCORPORAZIONE allegato /DECLARATIONOF INCORPORATION annex / ERKLÄRUNG FÜR DEN EINBAU anhang / DÉCLARATION D'INCORPORATION annexe / DECLARACIÓN DE INCORPORACIÓN anexo / DECLARAÇÃO DE INCORPORAÇÃO anexo / DEKLARACJA WBUDOWANIA załączniku / INBOUWVERKLARING bijlage IIB - 2006/42/CE

Fabbricante / Manufacturer / Hersteller / Fabricant / Fabricante / Fabricante / Wytwórca / Fabrikant

Came S.p.a.

indirizzo / address / adresse / adresse / direcciòn / endereço / adres / adres

Via Martiri della Libertà 15 - 31030 Dosson di Casier, Treviso - Italy

CAME

DICHIARA CHE L'AUTOMAZIONE PER PORTE A BATTENTE / DECLARES THAT THE OPERATOR FOR SWING DOORS / ERKLÄRT DASS DIE DREHTÜRANTRIEB / DECLARE QUE LE AUTOMATISME POUR PORTES BATTANTES / DECLARA QUE LAS AUTOMATIZACIÓN PARA PUERTAS BATIENTES / DECLARA QUE AS AUTOMATIZAÇÕES PARA PORTAS A BATENTE / OSWIADCZA ZE NAPĘD DO DRZWI SKRZYDŁOWYCH / VERKLAART DAT DE AUTOMATISERING VOOR KLAPDEUREN

FLUO-SWS3

E' CONFORME ALLE DISPOSIZIONI DELLE SEGUENTI DIRETTIVE / IT COMPLIES WITH THE PROVISIONS OF THE FOLLOWING DIRECTIVES / DEN VORGABEN DER FOLGENDEN RICHTLINIEN ENTSPRECHEN / IL EST CONFORMES AUX DISPOSITIONS DES DIRECTIVES SUIVANTES / CUMPLEN CON LAS DISPOSICIONES DE LAS SIGUIENTES DIRECTIVAS / ESTÃO DE ACORDO COM AS DISPOSIÇÕES DAS SEGUINTES DIRECTIVAS / SA ZGODNE Z POSTANOWIENIAMI NASTEPUJACYCH DYREKTYW EUROPEJSKICH / VOLDOEN AAN DE VOORSCHRIFTEN VAN DE VOLGENDE RICHTLIJNEN:

- COMPATIBILITA' ELETTROMAGNETICA / ELECTROMAGNETIC COMPATIBILITY / ELEKTROMAGNETISCHE VERTRÄGLICHKEIT / COMPATIBILITÉ ÉLECTROMAGNÉTIQUE / COMPATIBILIDAD ELECTROMAGNÉTICA / COMPATIBILIDADE ELETROMAGNÉTICA / KOMPATYBILNOŚCI ELEKTROMAGNETYCZNEJ / ELEKTROMAGNETISCHE COMPATIBILITEIT : 2014/30/UE.

Riferimento norme armonizzate ed altre norme tecniche / Refer to European regulations and other technical regulations / Harmonisierte Bezugsnormen und andere technische Vorgaben / Référence aux normes harmonisées et aux autres normes techniques / Referencia normas armonizadas y otras normas técnicas / Referência de normas harmonizadas e outras normas técnicas / Odnosne normy ujednolicone i inne normy techniczne / Geharmoniseerde en andere technische normen waarnaar is verwezen

EN 61000-6-2:2005
EN 61000-6-3:2007+A1:2011
EN 62233:2008
EN 60335-1:2012+A11:2014
EN 60335-2-103:2015
EN 16005:2012
EN ISO 13849-2:2013

RISPETTA I REQUISITI ESSENZIALI APPLICATI: / MEET THE APPLICABLE ESSENTIAL REQUIREMENTS: / DEN WESENTLICHEN ANGEWANDTEN ANFORDERUNGEN ENTSPRECHEN: / RESPECTENT LES CONDITIONS REQUISES NECESSAIRES APPLIQUEES: / CUMPLEN CON LOS REQUISITOS ESENCIALES APLICADOS: / RESPEITAM O REQUISITOS ESSENCIAIS APLICADOS: / SPEŁNIAJA PODSTAWOWE WYMAGANE WYRUNKI: / VOLDOEN AAN DE TOEPASBARE MINIMUM EISEN:

1.1.3; 1.1.5; 1.2.1; 1.2.2; 1.3.2; 1.3.7; 1.3.8.1; 1.4.1; 1.4.2; 1.5.1; 1.5.6; 1.5.8; 1.5.9; 1.5.9; 1.5.13; 1.6.1; 1.6.3; 1.6.4; 1.7.1; 1.7.2; 1.7.4

PERSONA AUTORIZZATA A COSTITUIRE LA DOCUMENTAZIONE TECNICA PERTINENTE / PERSON AUTHORISED TO COMPILE THE RELEVANT TECHNICAL DOCUMENTATION / PERSON DIE BEVOLLMÄCHTIGT IST, DIE RELEVANTEN TECHNISCHEN UNTERLAGEN ZUSAMMENZUSTELLEN / DOCUMENTATION TECHNIQUE SPECIFIQUE D'AUTORISATION A CONSTRUIRE DE / PERSONA FACULTADA PARA ELABORAR LA DOCUMENTACIÓN TÉCNICA PERTINENTE / PESSOA AUTORIZADA A CONSTITUIR A DOCUMENTAÇÃO TÉCNICA PERTINENTE / OSOBA UPOWAZNIONA DO ZREDAGOWANIA DOKUMENTACJI TECHNICZNEJ / DEGENE DIE GEMACHTIGD IS DE RELEVANTE TECHNISCHE DOCUMENTEN SAMEN TE STELLEN.

CAME S.p.a.

La documentazione tecnica pertinente è stata compilata in conformità all'allegato VIIB. / The pertinent technical documentation has been drawn up in compliance with attached document VIIB. / Die relevante technische Dokumentation wurde entsprechend der Anlage VIIB ausgestellt. / La documentation technique spécifique a été remplie conformément à l'annexe IIB / La documentación técnica pertinente ha sido rellenada en cumplimiento con el anexo VIIB. / A documentação técnica pertinente foi preenchida de acordo com o anexo VIIB. / Odnosna dokumentacja techniczna zostala zredagowana zgodnie z zalacznikiem VIIB. / De technische documentatie terzake is opgesteld in overeenstemming met de bijlage VIIB.

CAME S.p.a. si impegna a trasmettere, in risposta a una richiesta adeguatamente motivata delle autorità nazionali, informazioni pertinenti sulle quasi macchine, e / Came S.p.A., following a duly motivated request from the national authorities, undertakes to provide information related to the quasi machines, and / Die Firma Came S.p.A. verpflichtet sich auf eine angemessen motivierte Anfrage der staatlichen Behörden Informationen über die unvollständigen Maschinen, zu übermitteln, und / Came S.p.A. s'engage à transmettre, en réponse à une demande bien fondée de la part des autorités nationales, les renseignements relatifs aux quasi machines / Came S.p.A. se compromete a transmitir, como respuesta a una solicitud adecuadamente fundada por parte de las autoridades nacionales, informaciones relacionadas con las cuasimáquinas / Came S.p.A. compromete-se em transmitir, em resposta a uma solicitação motivada apropriadamente pelas autoridades nacionais, informações pertinentes às partes que componham máquinas / Came S.p.A. zobowiazuje sie do udzielenia informacji dotyczacych maszyn nieukonczonych na odpowiednio umotywowana prosbe, zlozona przez kompetentne organy panstwowe / Came S.p.A. verbindt zich ertoe om op met redenen omkleed verzoek van de nationale autoriteiten de relevante informatie voor de niet voltooide machine te verstrekken,

VIETA / FORBIDS / VERBIETET / INTERDIT / PROHIBE / PROIBE / ZABRANIA SIE / VERBIEDT

la messa in servizio finchè la macchina finale in cui deve essere incorporata non è stata dichiarata conforme, se del caso alla 2006/42/CE. / commissioning of the above mentioned until such moment when the final machine into which they must be incorporated, has been declared compliant, if pertinent, to 2006/42/CE / die Inbetriebnahme bevor die „Endmaschine" in die die unvollständige Maschine eingebaut wird, als konform erklärt wurde, gegebenenfalls gemäß der Richtlinie 2006/42/EU. / la mise en service tant que la machine finale dans laquelle elle doit être incorporée n'a pas été déclarée conforme, le cas échéant, à la norme 2006/42/CE. / la puesta en servicio hasta que la máquina final en la que será incorporada no haya sido declarada de conformidad de acuerdo a la 2006/42/CE / a colocação em funcionamento, até que a máquina nal, onde devem ser incorporadas, não for declarada em conformidade, se de acordo com a 2006/42/CE. / Uruchomienia urzadzenia do czasu, kiedy maszyna, do której ma byc wbudowany, nie zostanie oceniona jako zgodna z wymogami dyrektywy 2006/42/WE, jesli taka procedura byla konieczna. / deze in werking te stellen zolang de eindmachine waarin de niet voltooide machine moet worden ingebouwd in overeenstemming is verklaard, indien toepasselijk met de richtlijn 2006/42/EG.

Dosson di Casier (TV)
27 Maggio / May / Mai / Mai / Mayo / Maio / Maj / Mei 2020

Direttore Tecnico / Chief R&D Officer / Technischer Direktor / Directeur Technique / Director Técnico / Diretor Técnico / Dyrektor Techniczny / Technisch Directeur (Special Proxy Holder)

Antonio Milici

Antonio Milici

Fascicolo tecnico a supporto / Supporting technical dossier / Unterstützung technische Dossier / soutenir dossier technique / apoyo expediente técnico / apoiar dossier técnico / wspieranie dokumentacji technicznej / ondersteunende technische dossier: 818SW-0140

2. TECHNICAL DATA

Technical data	FLUO-SWS3
Model	SPRING
Use	Opening by motor, closing by spring and motor, with easy manual handling
Reference standard	EN 16005 EN 1154 (closing force: EN4) EN 1634-1 (fire resistance: 120 min)
Product dimensions (Height x Depth x Length)	88 x 130 x 540 mm
Maximum load:	300 kg x 0,8 m 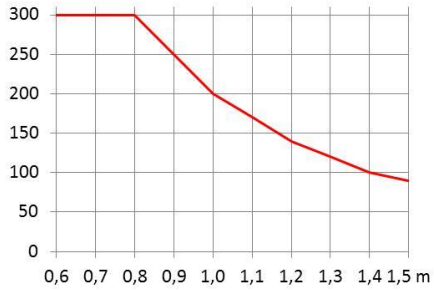
Opening and closing time	2 – 6 s
Duty class Intermittent operation	Continuous operation 100%
Power supply Rated power Stand-by	100 – 240 Vac 50/60 Hz 70 W 3 W
Rated load	40 Nm
Protection Rating	IP 20
Operating temperature	-15 °C +50 °C
Parameter adjustment	Buttons and Display
Connections to control and safety devices	Dedicated connecting terminals
Number of programmable terminals	4 (G1, G2, G3, G4)
Power output for accessories	12 Vdc (1A max)
Power output for electric locks and electronic locks	12 Vdc (1A max) / 24 Vdc (0,5 A max)
Firmware update	USB standard
Function selector device	818XA-0074, 818XA-0075
Battery power device	818XC-0041

N.B. The technical data above refer to average conditions of use and cannot be certain in each case. Each automatic entrance variables such as: friction, balancing and environmental conditions that may substantially change both the duration and the quality of the operation of the automatic or some of its components, including the automation. The installer must to adopt adequate safety coefficients for each particular installation.

3. STANDARD INSTALLATION

Rif.	Code	Description
1	818SW-0140	FLUO-SWS3 automation (Spring) for swing doors
2	818XA-0069	Sliding arm
3	001MR8534, 001MR8570, 001MR8590	Safety sensor
4	001MR8204, 001MR8003, 001MR8106, 001MR8107	Opening sensor
5	818XA-0074, 818XA-0075	Electronic function selector

Note: Components and codes are those most commonly used in systems for automatic swing doors. The full range of equipment and accessories is also available in the sales list.

The given operating and performance features can only be guaranteed with use of CAME accessories and safety devices.

4. ASSEMBLY PROCEDURE OF THE AUTOMATION

Check the stability, the weight of the leaf and that the movement is smooth and without friction (if necessary to reinforce the frame). Any closing door device must be removed or completely deactivated.

The tightening torque of the screws is shown in the following table.

Screw type		Torque	Ref.
	M8 x 20 mm	5 Nm	A
	M6 x 10 mm	5 Nm	arm
	M10 x 12 mm	5 Nm	B - C
	M5 x 14 mm	5 Nm	motor
	2,9 x 13 mm	1 Nm	cover

4.1 INSTALLATION OF FLUO-SWS3 AUTOMATION WITH 818XA-0069 SLIDING ARM

Use the sliding arm to pull with doors which open inside (view from the automation).

Remove the cover and fix the automation in a stable and leveled way to the wall using screws with a diameter ≥ 4.8 mm, using the measurements shown in the figure.

Refer to the axis of the door hinges, the X measurement can vary from 50 to -50 mm (see the types of installation on the following pages).

Note: if necessary, you can change the measure H, between the automation and the door, by replacing the spacer, using the codes listed in the table.

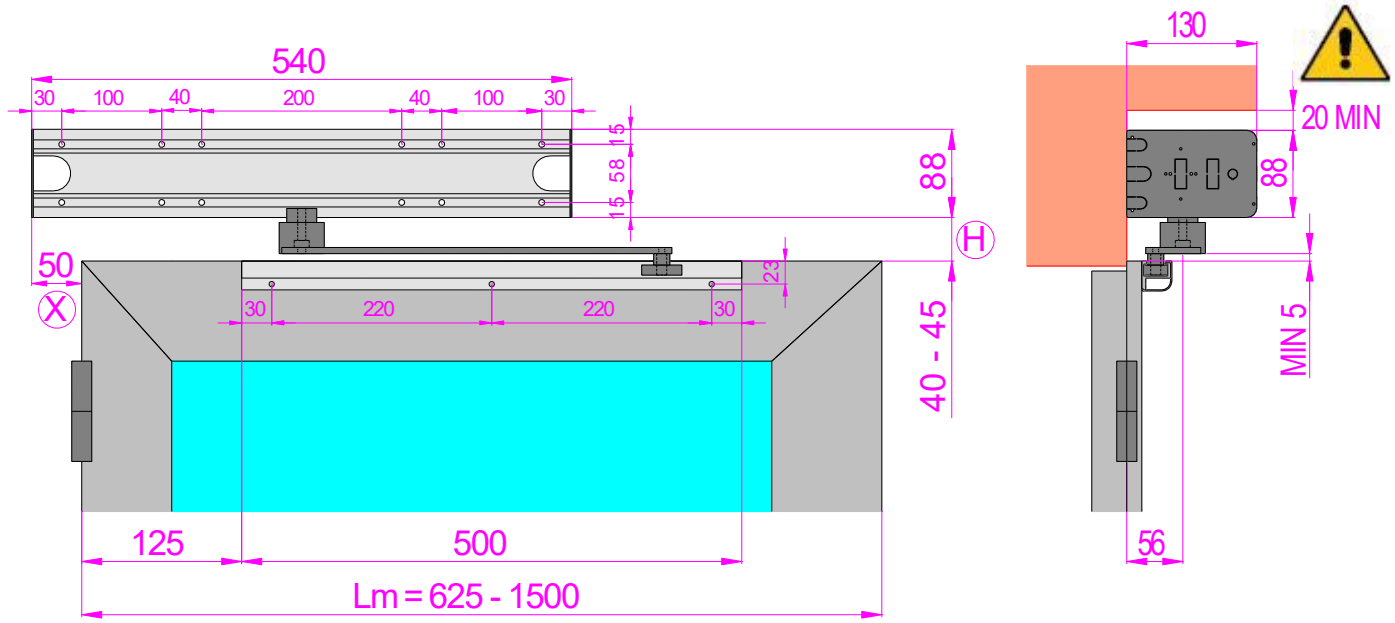

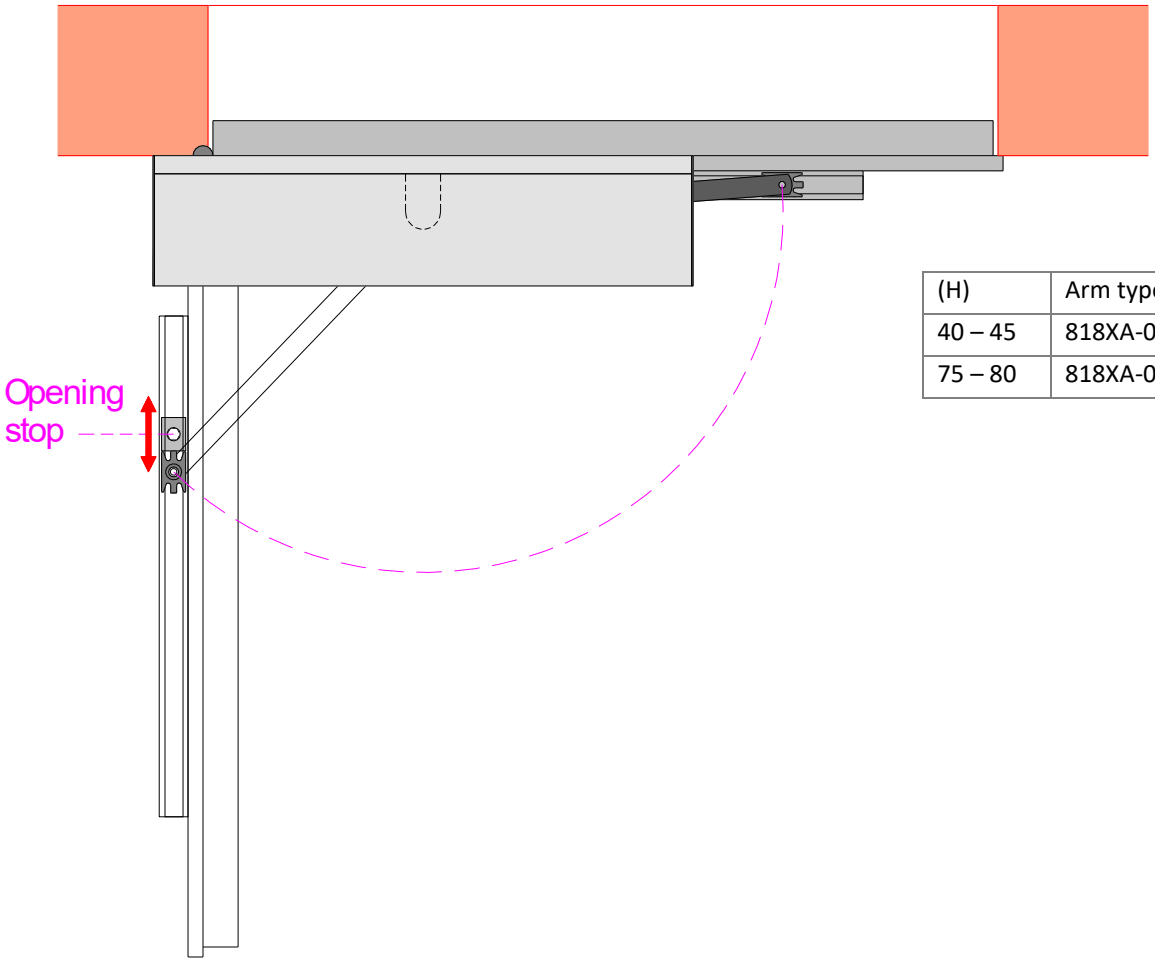

(H)	Arm type
40 – 45	818XA-0069
75 – 80	818XA-0069 + 818XA-0073

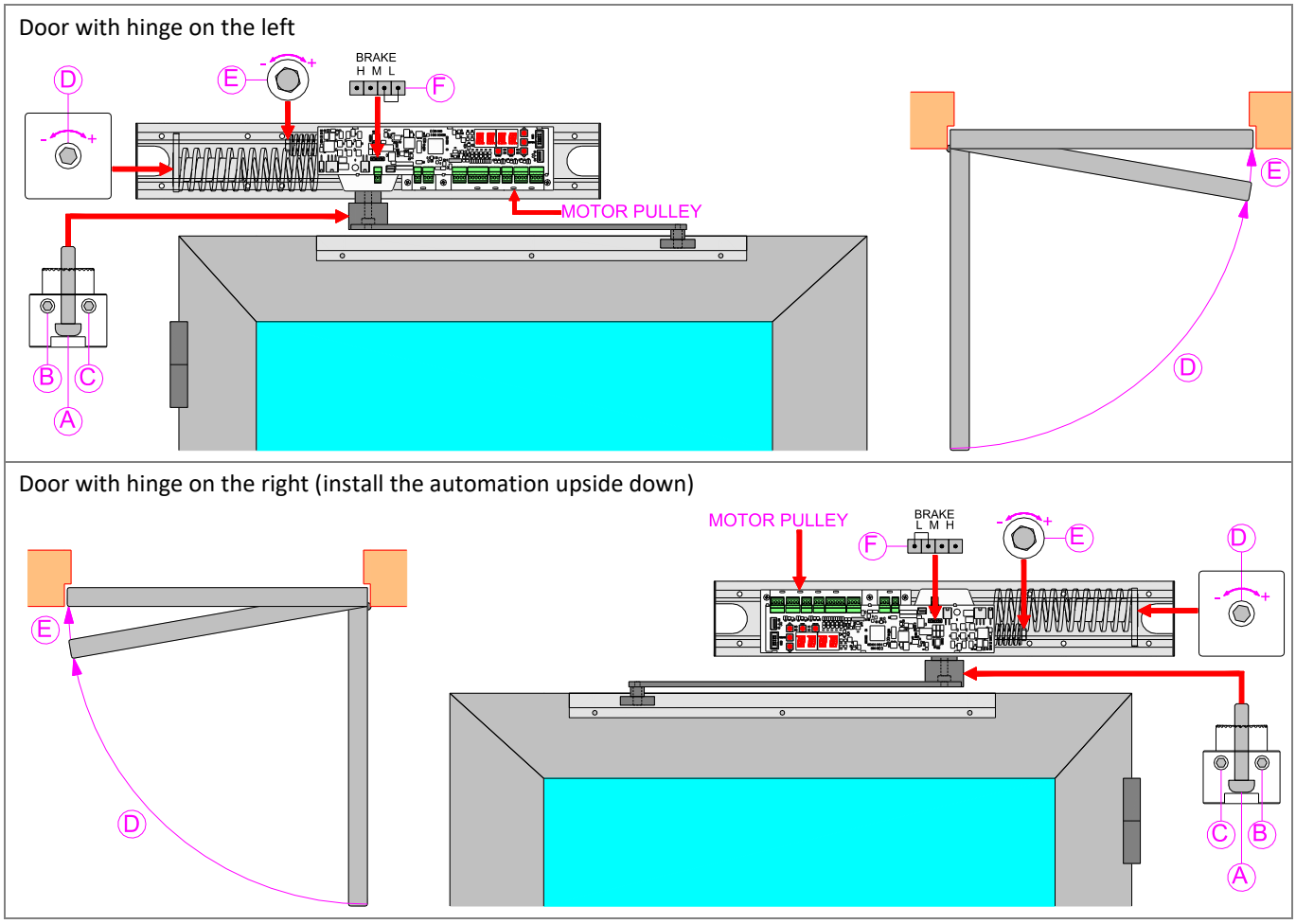

FIXING THE SLIDING ARM AND PRE-CHARGING OF THE CLOSING SPRING

Fix the sliding arm on the door as shown in the figure.

Bring the door to the closed position, insert the sliding arm in the guide and fix to the automation.

Check that the screws (B) and (C) are completely unscrewed.

Unscrew the screw (A) by about ½ turn using a 5 mm hexagon key.

Tighten the screw (B) until the motor pulley turns, and then tighten the screw (B) for about 1 turn.

Tighten the screw (A).

Tighten the screws (B) and (C).

ADJUSTMENT OF THE CLOSING SPRING

The automation is supplied with the closing spring regulated with minimum force.

To increase the closing force of the spring, tighten the screw (D) using a 13 mm key.

If necessary, to increase the braking of the closing spring, move the jumper on the BRAKE connector (F) of the electronic control to the position M (medium braking), or H (high braking), or MAX (maximum braking).

ADJUSTMENT OF THE SMALL SPRING

The automation is supplied with the small spring regulated with minimum force.

To increase the closing force in the last 4 degrees, tighten the screw (E) using a 13 mm key.

To reduce the closing force in the last 4 degrees, unscrew the screw (E).

Move the door manually, and verify the correct opening and closing force.

WARNING: Adjust the opening mechanical stop inside the sliding guide.

CLOSING OF THE AUTOMATION COVER

Attach the cover profile to the base profile. To prevent the cover from being opened without the use of a tool, you can secure the cover to the heads at the holes, using the screws 2,9x9,5.

TYPES OF INSTALLATION WITH 818XA-0069 (818XA-0070) SLIDING ARM

Ref.	Arm code	X	B max	Opening	Lm min
1	818XA-0069	50	0	100°	625
2	818XA-0069	0	0	90°	675
3	818XA-0070	-50	100	90°	900
4	818XA-0070	50	200	90°	900
5	818XA-0070	0	0	110°	815
6	818XA-0070	0	150	90°	900
7	818XA-0070	-50	0	100°	850

4

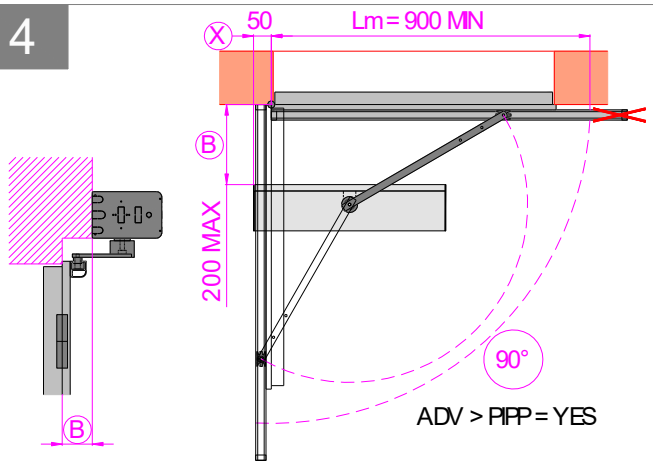

1

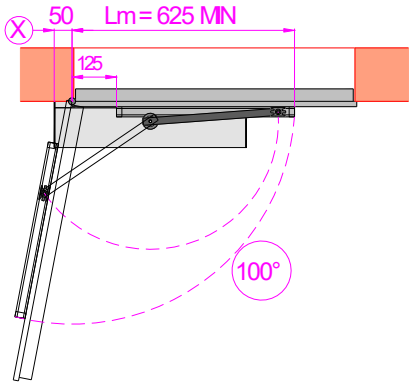

5

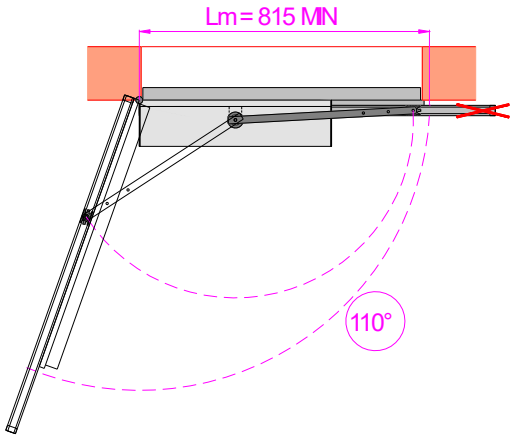

2

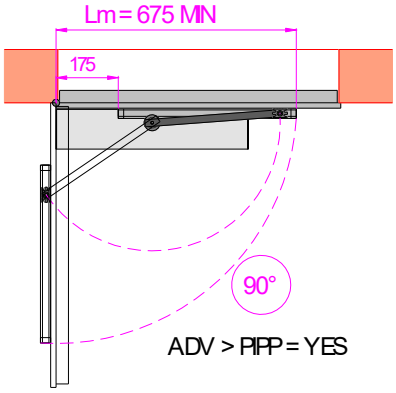

6

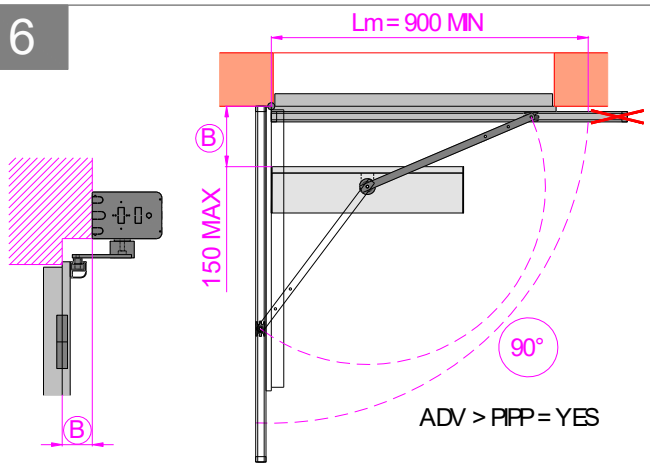

3

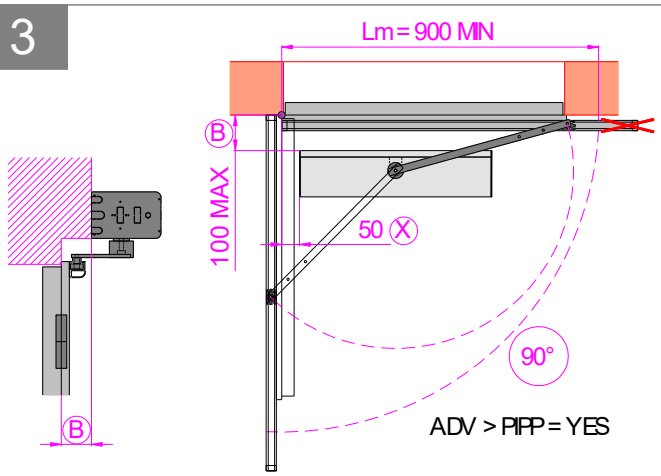

7

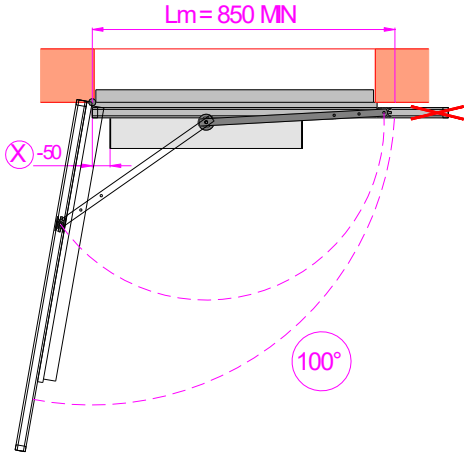

4.2 INSTALLATION OF FLUO-SWS3 AUTOMATION WITH 818XA-0070 SLIDING ARM

Use the sliding arm to push with doors which open outside (view from the automation).

Remove the cover and fix the automation in a stable and leveled way to the wall using screws with a diameter ≥ 4.8 mm, using the measurements shown in the figure.

Refer to the axis of the door hinges, the X measurement can vary from 50 to -50 mm (see the types of installation on the following pages).

Note: if necessary, you can change the measure H, between the automation and the door, by replacing the spacer, using the codes listed in the table.

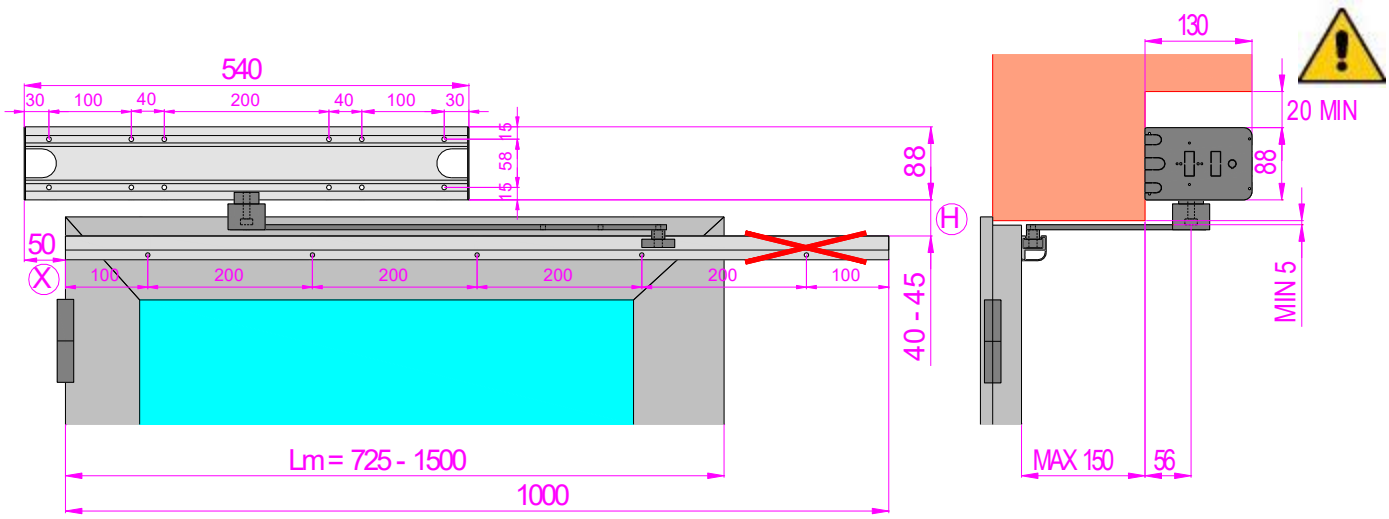

(H)	Arm type
40 – 45	818XA-0070
75 – 80	818XA-0070 + 818XA-0073

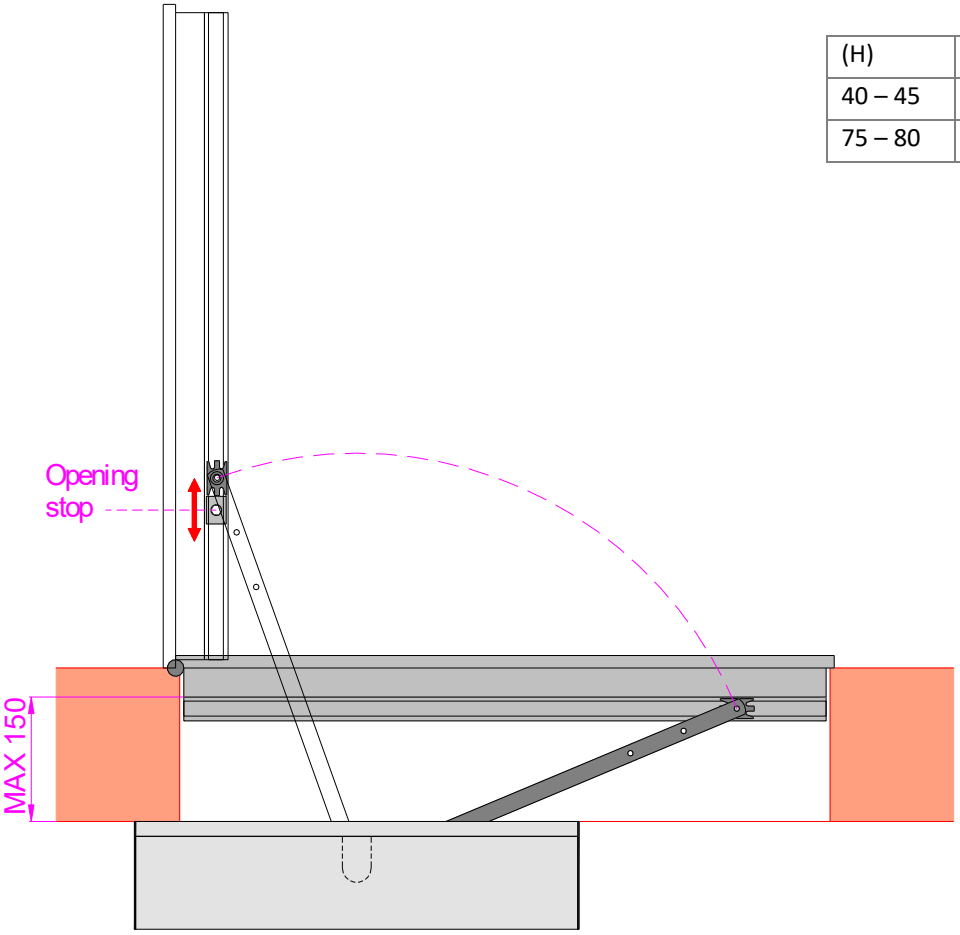

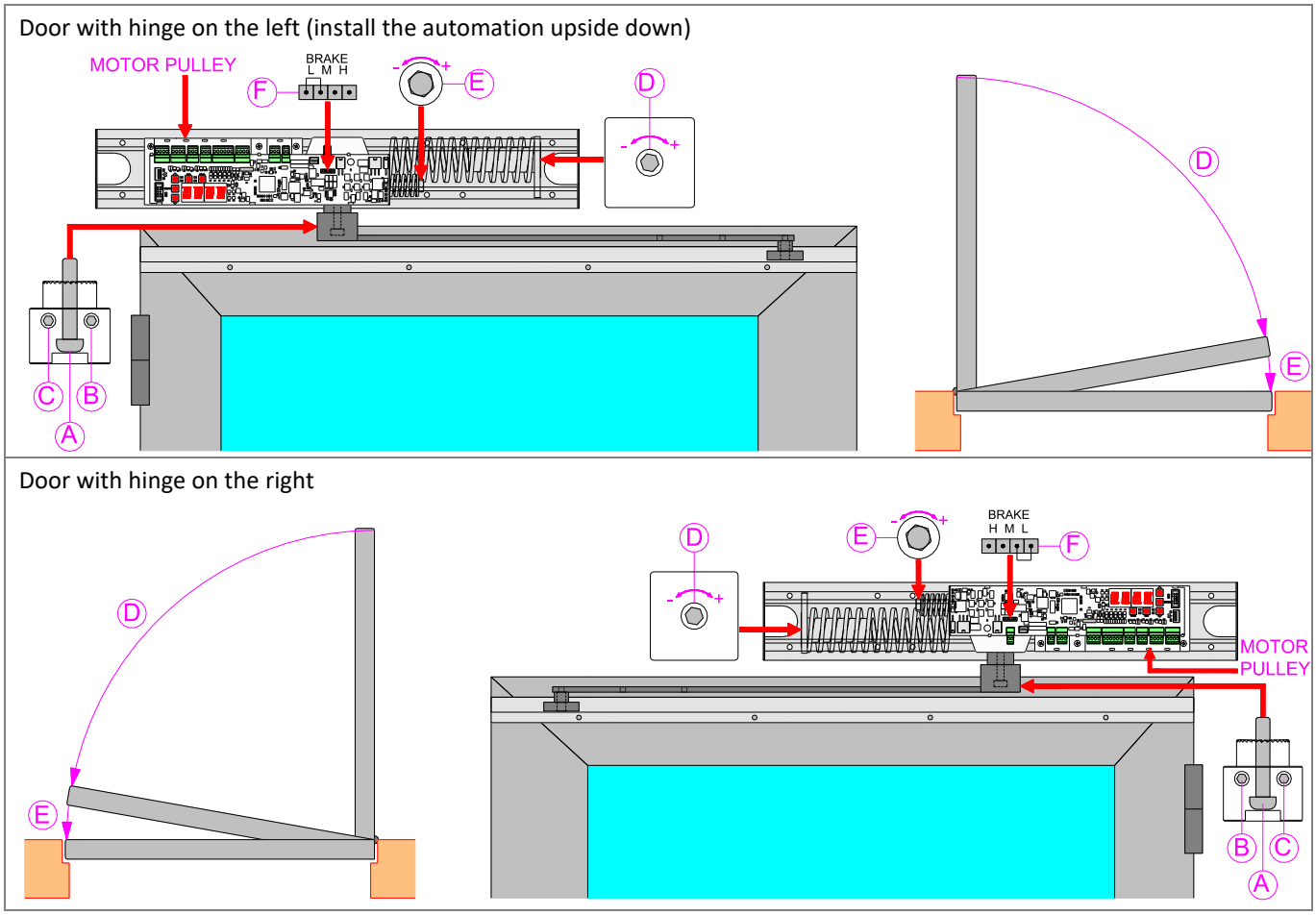

FIXING THE SLIDING ARM AND PRE-CHARGING OF THE CLOSING SPRING

Fix the sliding arm on the door as shown in the figure. If the leaf width is reduced, shorten the sliding guide.

Bring the door to the closed position, insert the sliding arm in the guide and fix to the automation.

Check that the screws (B) and (C) are completely unscrewed.

Unscrew the screw (A) by about ½ turn using a 5 mm hexagon key.

Tighten the screw (B) until the motor pulley turns, and then tighten the screw (B) for about 1 turn.

Tighten the screw (A).

Tighten the screws (B) and (C).

ADJUSTMENT OF THE CLOSING SPRING

The automation is supplied with the closing spring regulated with minimum force.

To increase the closing force of the spring, tighten the screw (D) using a 13 mm key.

If necessary, to increase the braking of the closing spring, move the jumper on the BRAKE connector (F) of the electronic control to the position M (medium braking), or H (high braking), or MAX (maximum braking).

ADJUSTMENT OF THE SMALL SPRING

The automation is supplied with the small spring regulated with minimum force.

To increase the closing force in the last 4 degrees, tighten the screw (E) using a 13 mm key.

To reduce the closing force in the last 4 degrees, unscrew the screw (E).

Move the door manually, and verify the correct opening and closing force.

WARNING: Adjust the opening mechanical stop inside the sliding guide.

CLOSING OF THE AUTOMATION COVER

Attach the cover profile to the base profile. To prevent the cover from being opened without the use of a tool, you can secure the cover to the heads at the holes, using the screws 2,9x9,5.

TYPES OF INSTALLATION WITH 818XA-0070 SLIDING ARM

Ref.	Arm code	X	B max	Opening	Lm min
1	818XA-0070	50	0	100°	775
2	818XA-0070	0	0	100°	825
3	818XA-0070	-50	0	100°	875
4	818XA-0070	50	150	100°	725
5	818XA-0070	0	150	100°	775
6	818XA-0070	-50	150	100°	825

1

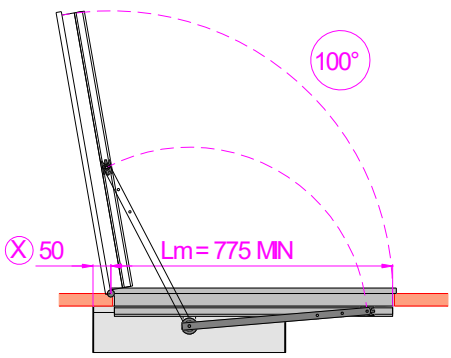

4

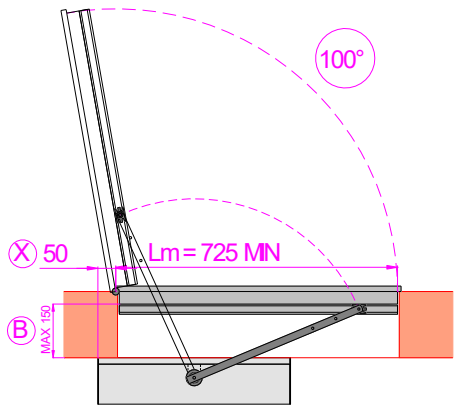

2

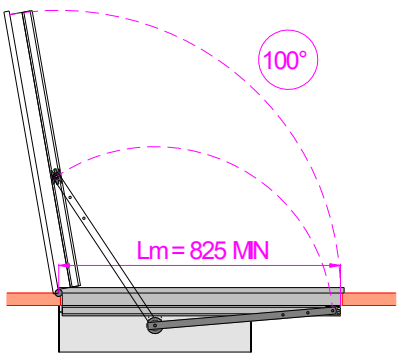

5

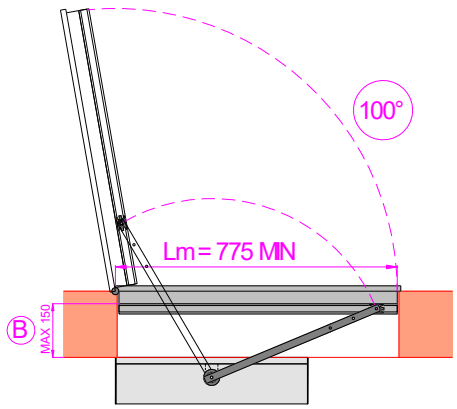

3

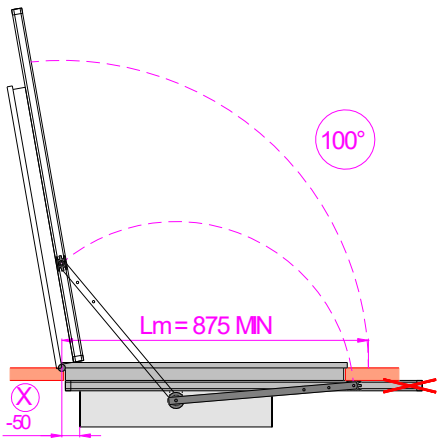

6

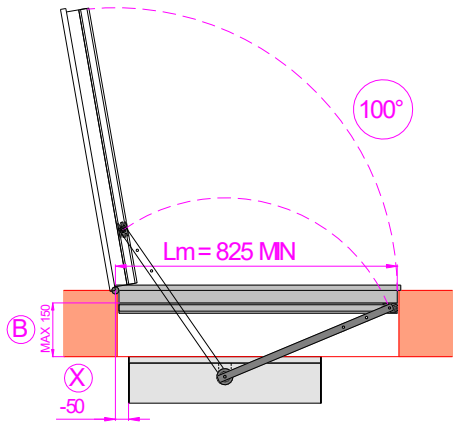

4.3 INSTALLATION OF FLUO-SWS3 AUTOMATION WITH 818XA-0071 ARTICULATED ARM

Use the articulated arm to push with doors which open outside (view from the automation).

Remove the cover and fix the automation in a stable and leveled way to the wall using screws with a diameter ≥ 4.8 mm, using the measurements shown in the figure.

Refer to the axis of the door hinges, the X measurement can vary from 50 to -50 mm (see the types of installation on the following pages).

Note: if necessary, you can change the measure H, between the automation and the door, by replacing the spacer, using the codes listed in the table.

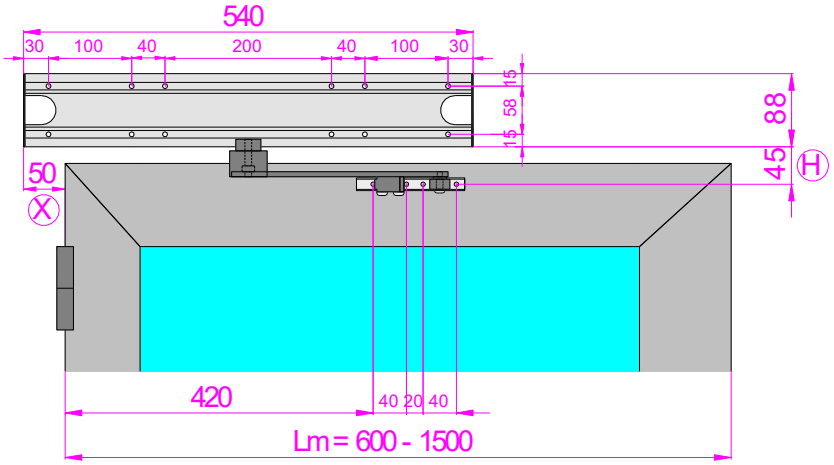

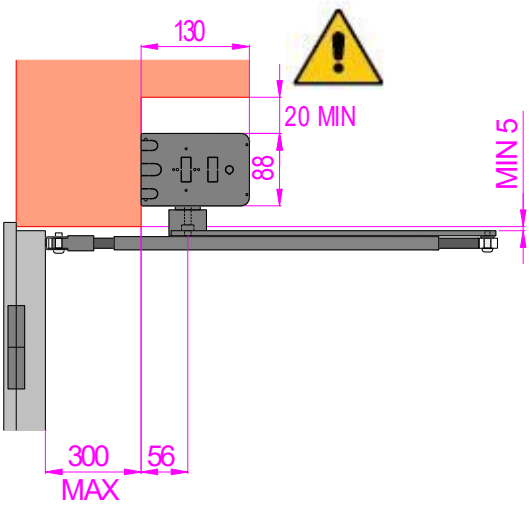

(H)	Arm type
45	818XA-0071
80	818XA-0071 + 818XA-0073

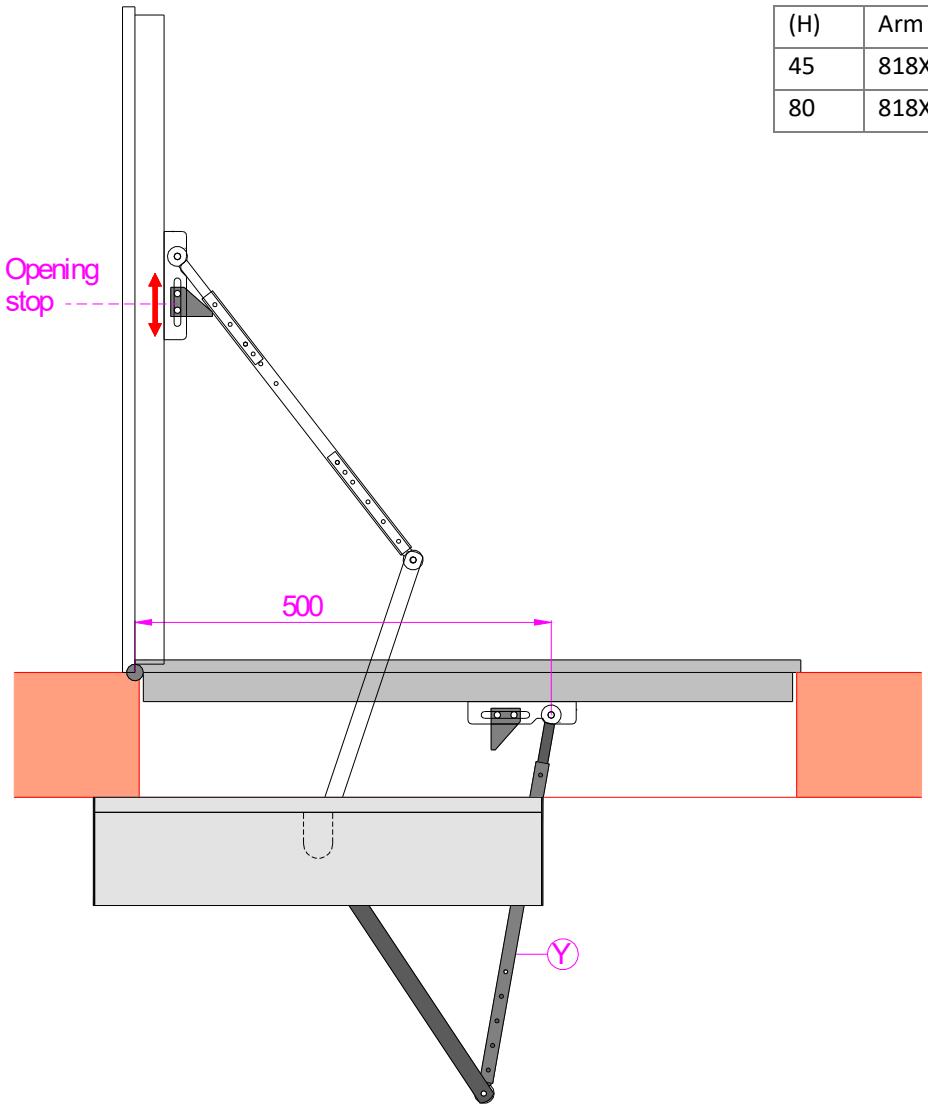

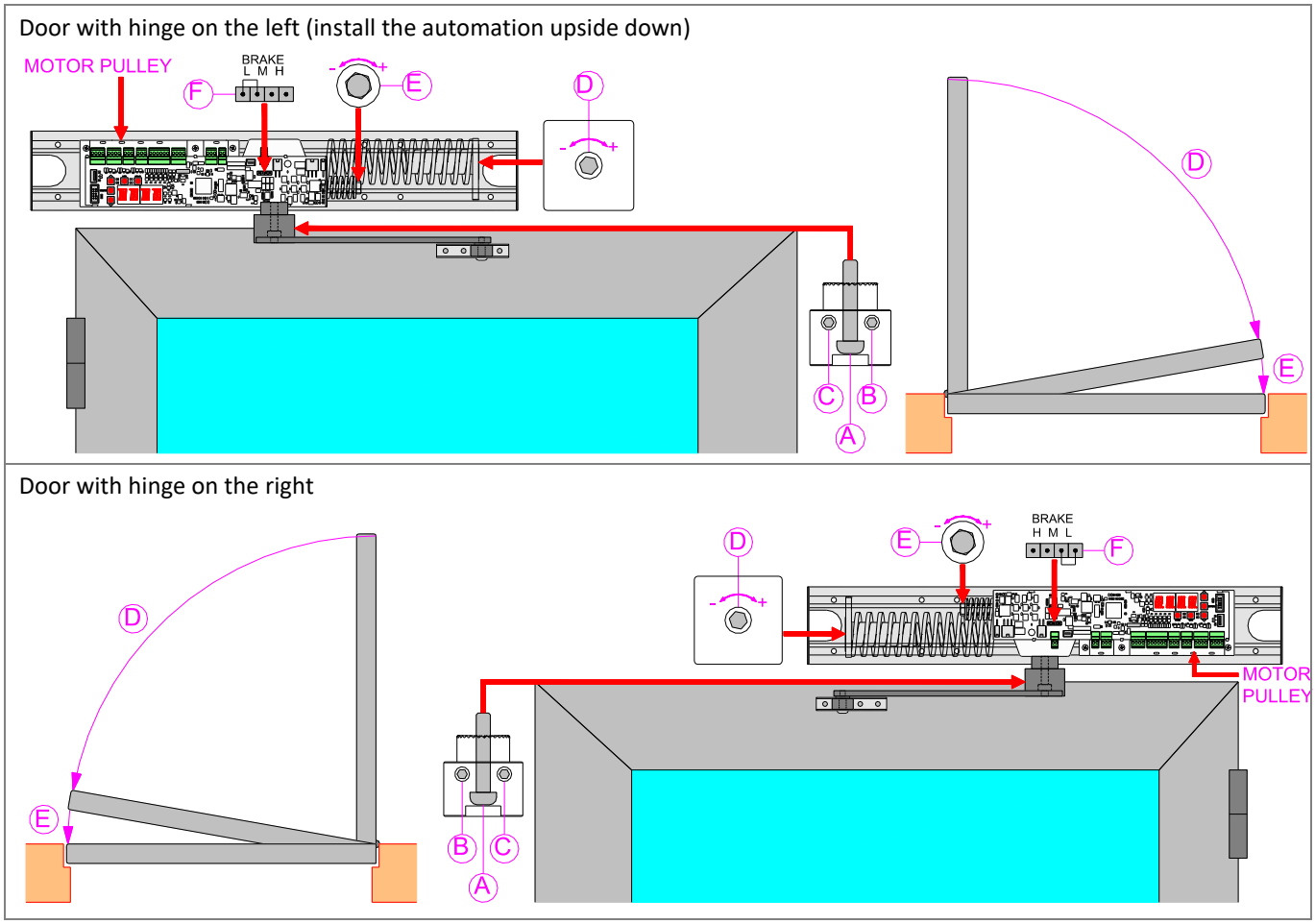

FIXING THE ARTICULATED ARM AND PRE-CHARGING OF THE CLOSING SPRING

Fix the bracket of the articulated arm on the door, using the measurements shown in the figure.

Bring the door to the closed position, fix the articulated arm to the automation, and fix the other end of the articulated arm to the door.

Adjust the length of the semi-arm (Y) so that the angle between the semi-arm (Y) and the door is about 90°.

Check that the screws (B) and (C) are completely unscrewed.

Unscrew the screw (A) by about ½ turn using a 5 mm hexagon key.

Tighten the screw (B) until the motor pulley turns, and then tighten the screw (B) for about 1 turn.

Tighten the screw (A).

Tighten the screws (B) and (C).

ADJUSTMENT OF THE CLOSING SPRING

The automation is supplied with the closing spring regulated with minimum force.

To increase the closing force of the spring, tighten the screw (D) using a 13 mm key.

If necessary, to increase the braking of the closing spring, move the jumper on the BRAKE connector (F) of the electronic control to the position M (medium braking), or H (high braking), or MAX (maximum braking).

ADJUSTMENT OF THE SMALL SPRING

The automation is supplied with the small spring regulated with minimum force.

To increase the closing force in the last 4 degrees, tighten the screw (E) using a 13 mm key.

To reduce the closing force in the last 4 degrees, unscrew the screw (E).

Move the door manually, and verify the correct opening and closing force.

WARNING: Adjust the position of the opening mechanical stop on the articulated arm.

CLOSING OF THE AUTOMATION COVER

Attach the cover profile to the base profile. To prevent the cover from being opened without the use of a tool, you can secure the cover to the heads at the holes, using the screws 2,9x9,5.

TYPES OF INSTALLATION WITH 818XA-0071 ARTICULATED ARM

Ref.	Arm code	X	B max	Opening	Lm min
1	818XA-0071	50	0	100°	600
2	818XA-0071	0	0	95°	650
3	818XA-0071	-50	0	90°	700
4	818XA-0071	50	300	115°	600
5	818XA-0071	0	300	105°	650
6	818XA-0071	-50	300	100°	700

1

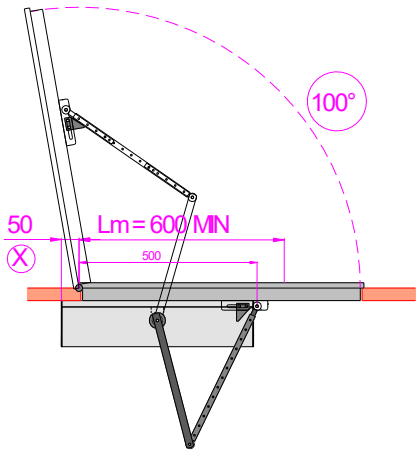

2

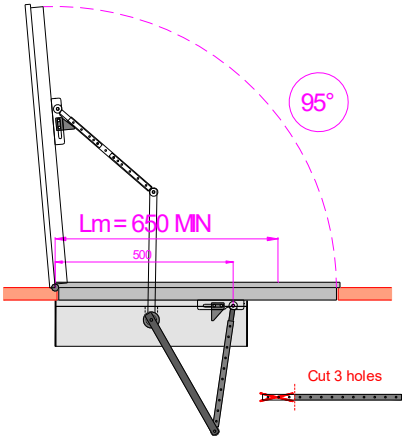

3

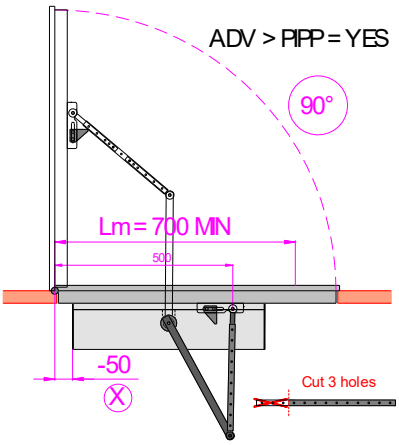

4

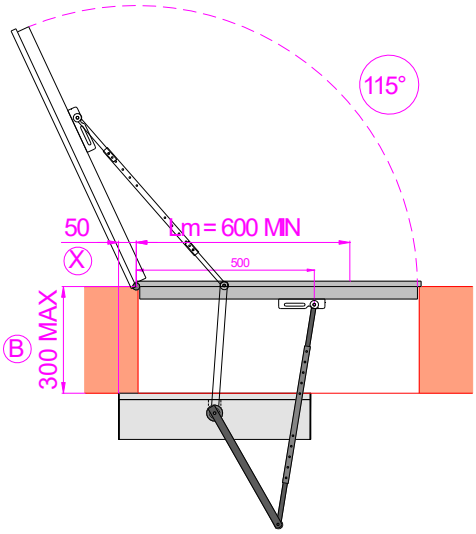

5

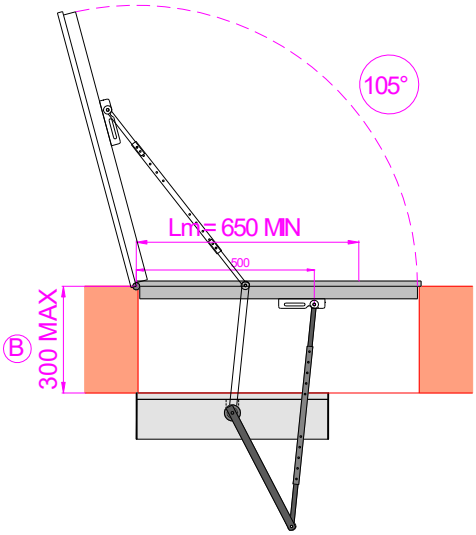

6

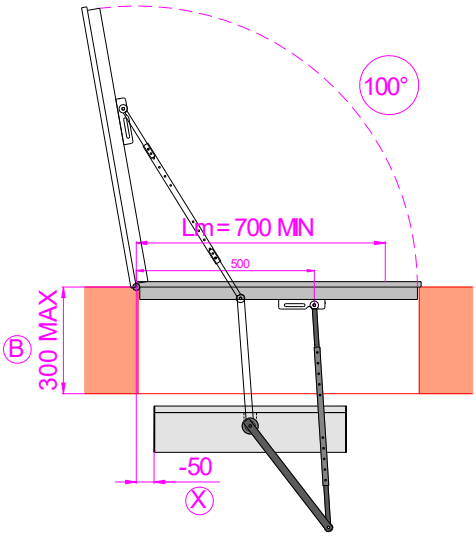

5. ELECTRICAL CONNECTIONS

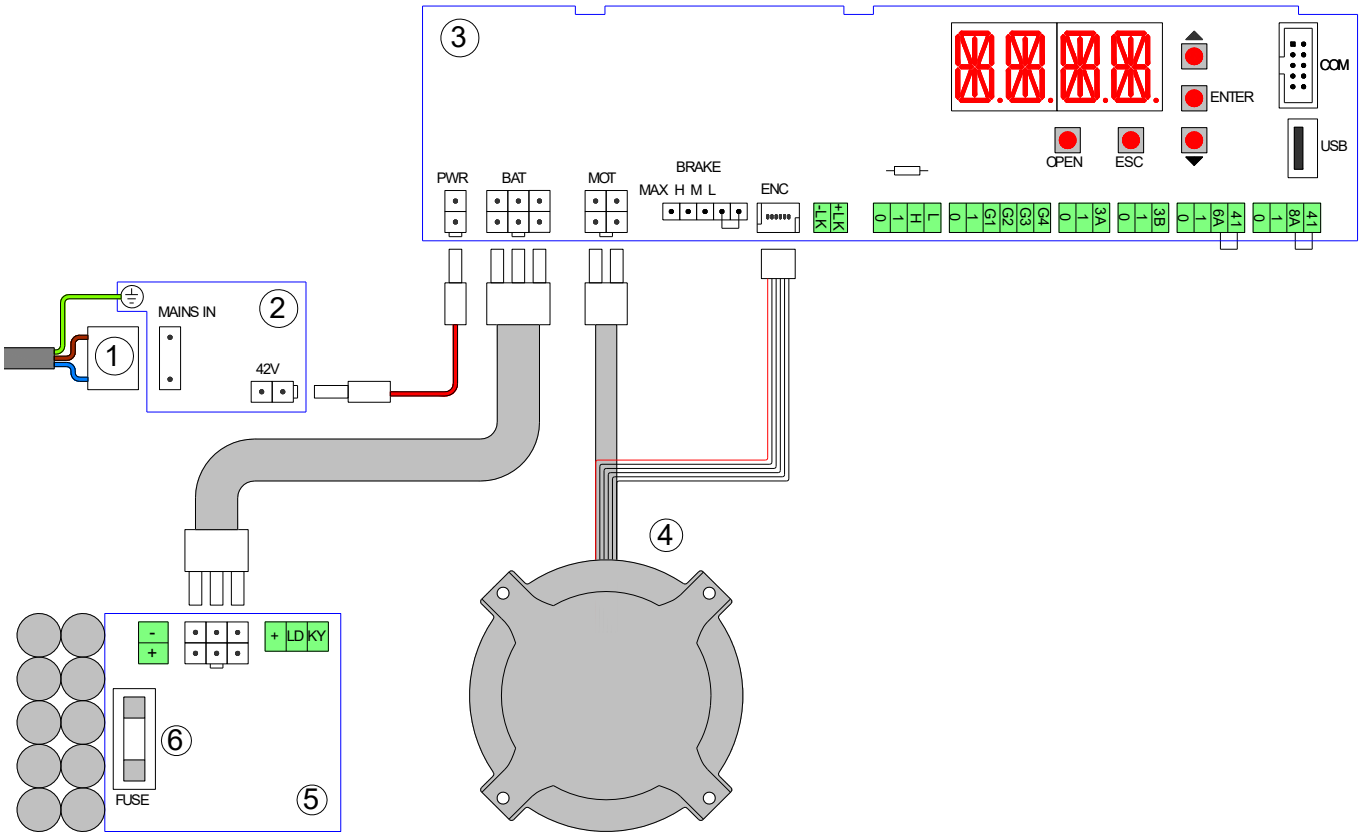

Rif.	Code	Terminals	Description
1	88018-0036	MAINS IN	Cable for connection to the power supply.
2	-	PWR	Switching power supply 42V
3	-		Electronic control
4	-	MOT	Brushless motor
		ENC	Angular sensor
5	818XC-0041	BAT	Battery power device
6		FUSE	Battery fuse 5x20 - F10A

5.1 GENERAL SAFETY ELECTRICAL PRECAUTIONS

Installation, electrical connections and adjustments must be completed in conformity with Good Working Methods and with regulations in force.

Before connecting the power supply, make sure that the data on the label correspond to those of the mains supply.

A multipolar disconnection switch with a contact opening gap of at least 3 mm must be incorporated in the fixed wiring in accordance with the wiring rules. This switch must be protected from unauthorized activations.

Check that the mains supply is equipped with a suitable residual current circuit breaker and a 6 A overcurrent protection.

Connect the automation to an effective earthing system carried out as indicated by current safety regulations.

During installation, maintenance and repair operations, cut off the power supply before opening the cover to access the electrical parts. To handle electronic parts, wear earthed antistatic conductive bracelets.

CAME declines all responsibility in the event of components which are not compatible with the safe and correct operation of the product.

For repairs or replacements of products only original spare parts must be used.

5.2 POWER SUPPLY ELECTRICAL CONNECTION

The connection to the mains supply can be done in one of the two following ways.

1) ELECTRICAL CONNECTION THROUGH THE AUTOMATION BASE

Use the electric cable and the supplied terminals for the connection to the mains supply through a channel in the wall, previously made.

Note: Shorten the electric cable to the desired size.

Make sure there are no sharp edges that might damage the electric cable.

For the connection to the mains supply use an independent channel, separated from the connections to control and safety devices.

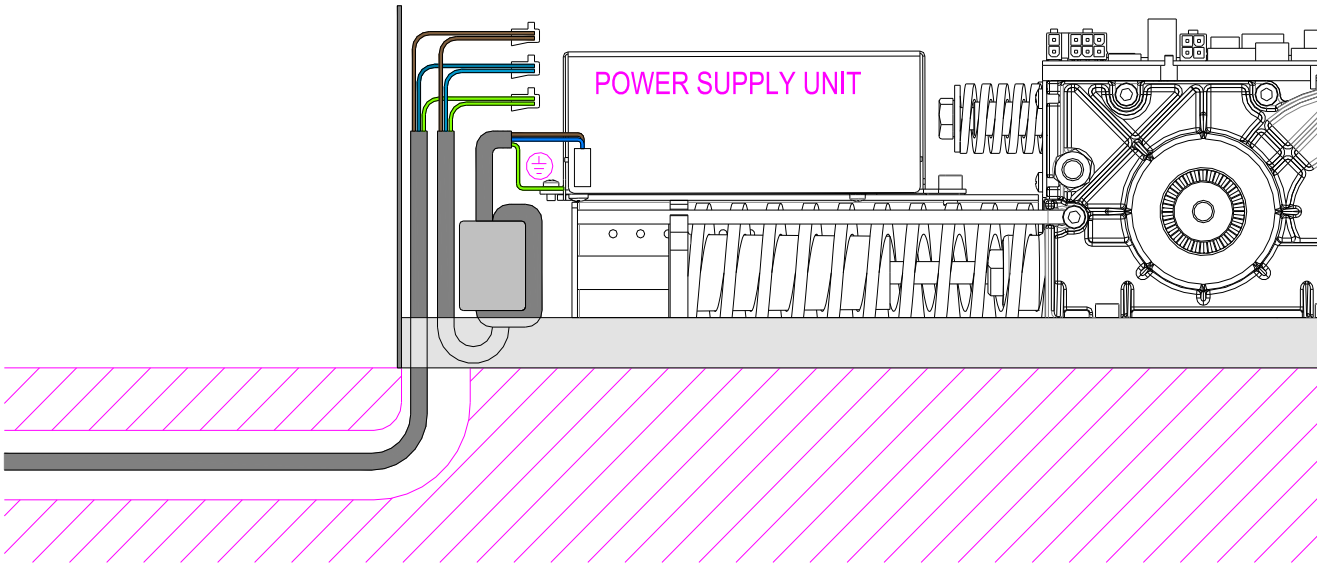

2) ELECTRICAL CONNECTION THROUGH THE AUTOMATION END CAP

If the path of the electric cable is outer the wall, drill the end cap on the suitable area, fix the electric cable using a supplied PG9 cable gland.

Connect the electric cable to the junction box (using the supplied terminals), or connect the electric cable to the wall socket using an electrical plug (not supplied by us).

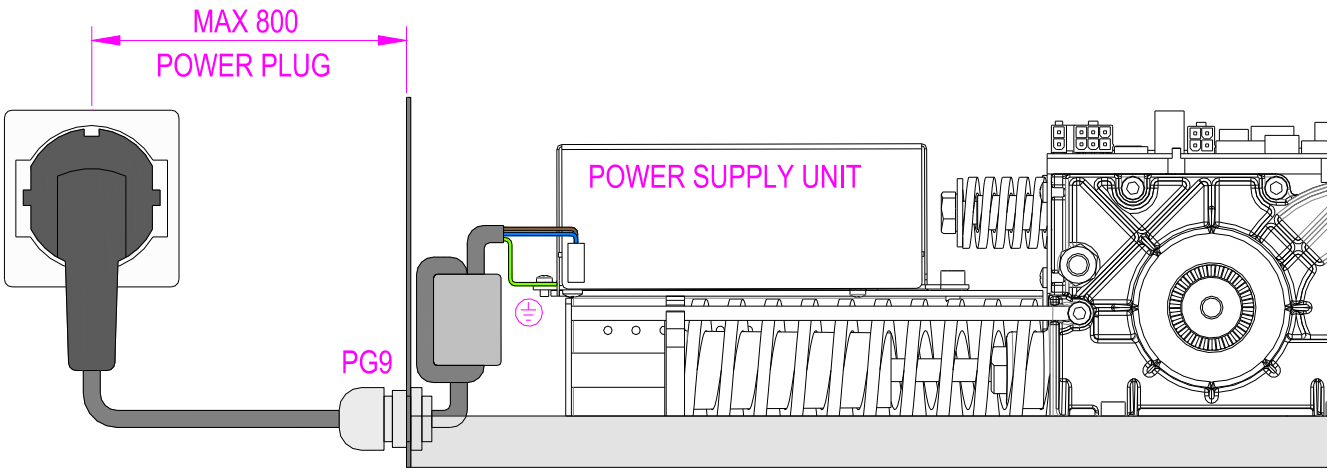

5.3 ELECTRONIC CONTROL TERMINALS

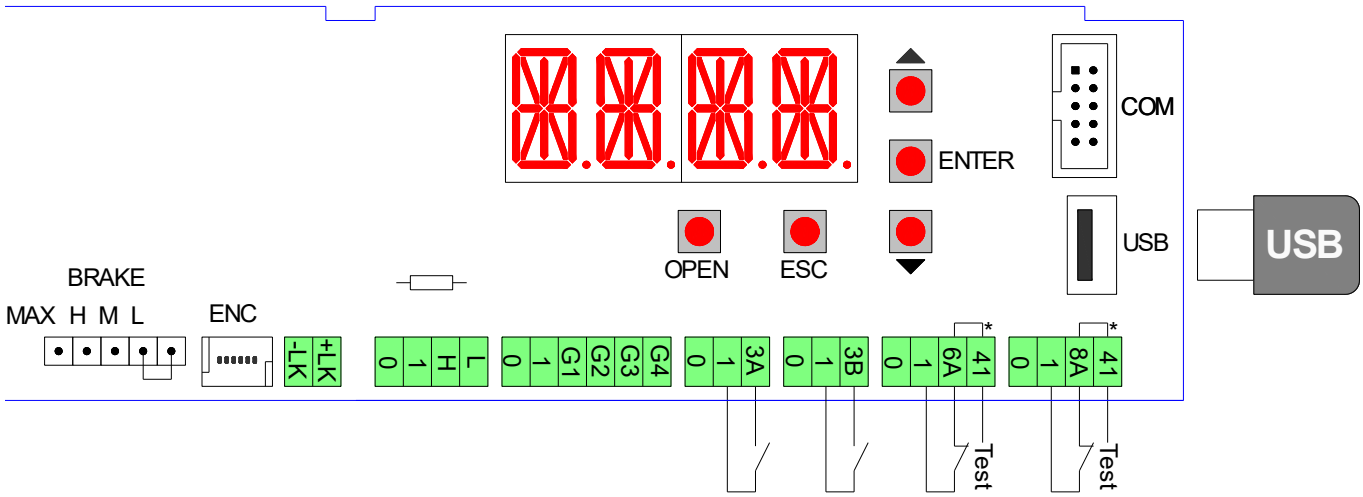

Note: The terminals with the same number are equivalent.
The electronic control comes with the jumpers on the terminals with an asterisk [*]. When connecting safety devices remove the jumpers of the corresponding terminals.

Terminals	Description
0 – 1	Output 12 Vdc for external powering accessories. The maximum absorption of 1 A corresponds to the sum of all the terminals 1 (+12V).
1 – 3A	Contact N.O. opening A side (interior side).
1 – 3B	Contact N.O. opening B side (outer side).
1 – 8A	Closing safety contact N.C. The opening of the contact causes the reversal of the movement. Note: connect safety devices with test (see terminal 41), and remove the jumper 41 - 8A.
1 – 6A	Opening safety contact N.C. The opening of the contact stops the movement during the opening phase; the door closes after 3s. If the automation is closed, the opening of the contact prevents the opening. Note: connect safety devices with test (see terminal 41), and remove the jumper 41 - 6A.
41	Test output (+12 V). Connect the safety devices with test (in accordance with EN 16005), as indicated in the following chapters. Note: in case of devices without test, connect the N.C. contact to terminals 41 - 8A or 41 - 6A.
1 – G1/G2/G3/G4 0 – G1/G2	Input terminal provided for general use. Output terminal (12 Vdc, 30 mA max) provided for general use. Using the ADV > STG1/STG2/STG3/STG4 menu you can choose a specific function to the G1/G2/G3/G4 terminal.
0 – 1 – H – L	Bus connection to the function selector.
+LK / -LK	Output 12Vdc (1 A max) / 24Vdc (0,5 A max) for electric lock.
BRAKE	Braking regulation in the absence of power supply: L = low, M = medium, H = high, MAX = maximum.
USB	USB standard. Allows saving the door settings and loading the firmware updates.

Buttons	Description
OPEN	Open the door.
↑	Scroll the menu and increase of selected values.
↓	Scroll the menu and reduction of selected values.
ENTER	Button to select the menu and save the selected data.
ESC	Exit the menu.

5.4 ELECTRICAL CONNECTION OF FUNCTION SELECTOR

Connect the 0-1-H-L terminals of the function selector, by cable (not supplied by us), to the 0-1-H-L terminals of the electronic control.
Note: for lengths over 10 m, use a cable with 2 twisted-pairs.
ATTENTION: the function selector must be used by authorized personnel only; if it is installed in a place accessible to the public, the function selector must be protected by a proximity badge (13.56MHz ISO15693 and ISO14443 Mifare) or by a numeric code (max 50 badges and codes).
The function selector allows the following settings.

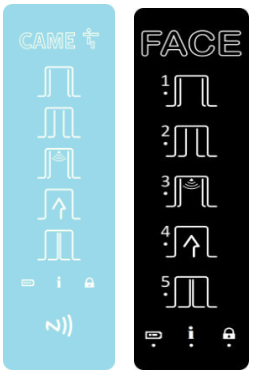

Simbolo	Description
	OPEN DOOR When selected, the symbol lights up, the door is permanently open. Note: the leaves can still be handled manually.
	AUTOMATIC PARTIAL OPERATION In the case of a door with 2 automations, when selected, the symbol lights and allows the automatic operation of only one leaf.
	AUTOMATIC BI-DIRECTIONAL OPERATION When selected, the symbol lights up, the door works automatic in bidirectional mode. **RESET** Select the symbol for 5 seconds, the automation performs the self-test and the automatic learning.
	AUTOMATIC ONE-WAY OPERATION When selected, the symbol lights up and automatic operation of the door is in one-way mode.
	CLOSED DOOR When selected, the door is permanently closed. Note: using the menu SEL > DLAY you can adjust the delay time to close the door. **MANUAL OPERATION (ADV > HAND = MIN/MAX)** Select the symbol for 3 seconds, the symbol flashes and the door can be moved manually.
	PROTECTED FUNCTION SELECTOR The symbol lights up if the function selector is protected. To activate the temporary operation of the function selector is necessary to approach the badge to the NFC symbol (818XA-0074), or enter the code (818XA-0075), or select for 3 seconds the logo.
CAME	**ACTIVATION OF FUNCTION SELECTOR BY LOGO (SEL>SECL=LOGO)** Select the logo for 3 seconds (the lock symbol light off), the function selector is activated for 10 seconds. Expired the time the function selector switches off (the lock symbol lights up).
 1 2 3 4 5	**ACTIVATION OF FUNCTION SELECTOR BY BADGE (SEL>SECL=TAG)** Approach the badge to the NFC symbol (the lock symbol light off), the function selector is activated for 10 seconds. Expired the time the function selector switches off (the lock symbol lights up). **ACTIVATION OF FUNCTION SELECTOR BY NUMERIC CODE (SEL>SECL=TAG)** Press the logo, enter the code (maximum 5 numbers), press the logo for confirmation, (the lock symbol light off), the function selector is activated for 10 seconds. Expired the time the function selector switches off (the lock symbol lights up).
	BATTERY SIGNAL Battery symbol off = the door is operating with the mains supply Battery symbol on = the door is operating with battery power Battery symbol flashing = the battery is low or disconnected
	INFORMATION SIGNAL Information symbol on = it is necessary to perform the ordinary maintenance of the door. Information symbol flashing = shows the presence of alarms: - 1 flash = failure of electronic control or locking device; - 2 flashes = mechanical failure; - 3 flashes = failure of sensor safety test; - 4 flashes = motor overtemperature.

5.5 ELECTRICAL CONNECTION OF OPENING SENSOR

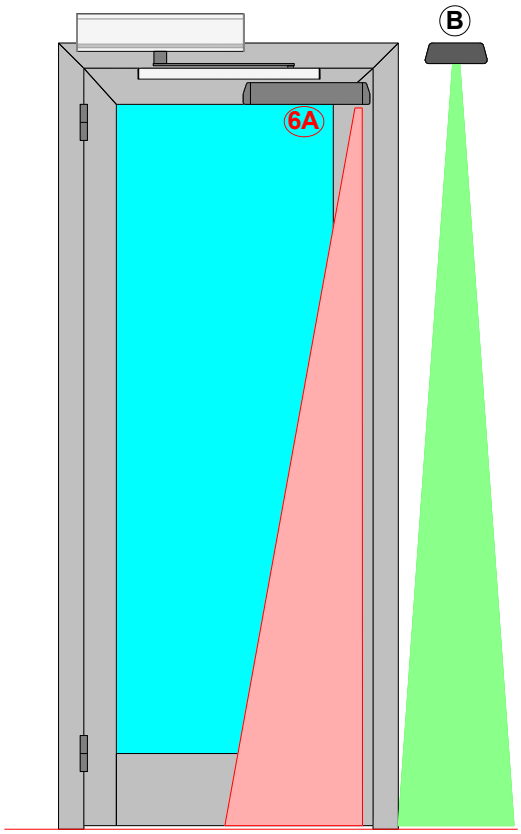

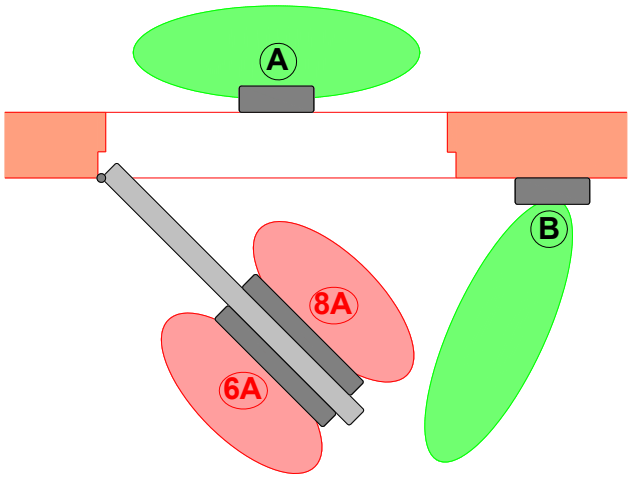

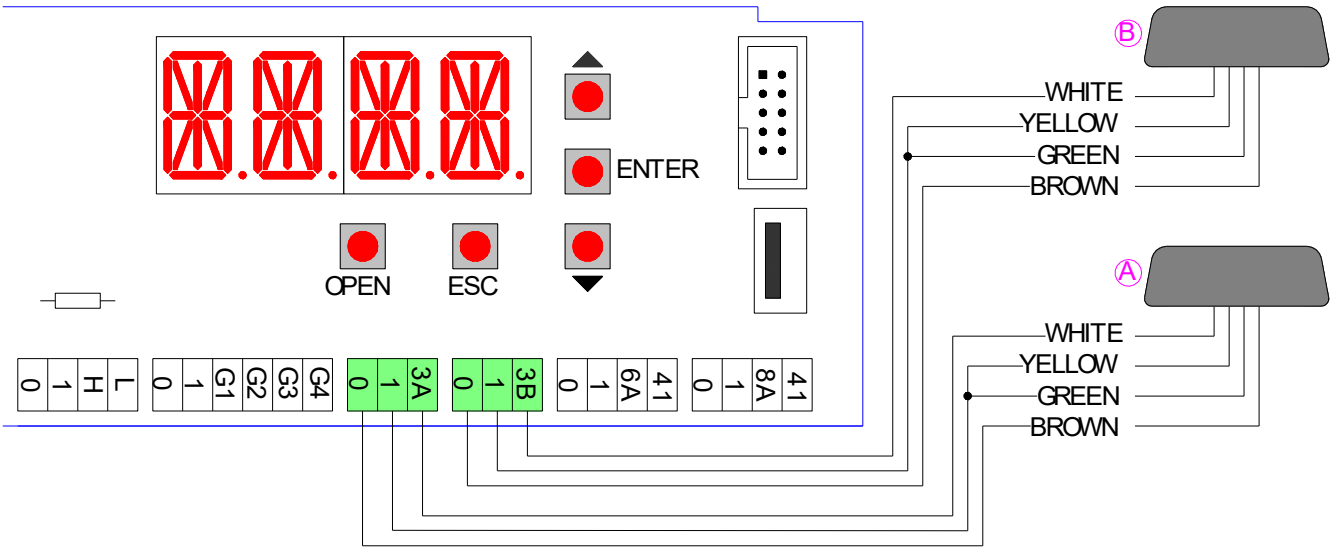

Connect the sensor, using the supplied cable to the terminals of the electronic control as follows:

	-	001MR8204	001MR8106, 001MR8107	001MR8003
OPENING	0	Brown	Brown	Grey
	1	Green Yellow	Green Yellow	Grey Yellow
	3A (3B)	White	White	White

SAFETY	0	Blue
	1	Pink
	8A	Grey
	41	Red

For more information, check the installation manual of the sensor.

5.6 ELECTRICAL CONNECTION OF SAFETY SENSOR

The safety sensors should be installed directly on the leaf of the door, and protect both the opening and the closing of the swing door.

To simplify the installation of the safety sensors, you can choose one of the following two options.

- OPTION 1: Connect the 2 sensors to each other, using the supplied cable. Connect only one of the 2 sensors to the electronic control terminals, as shown below.

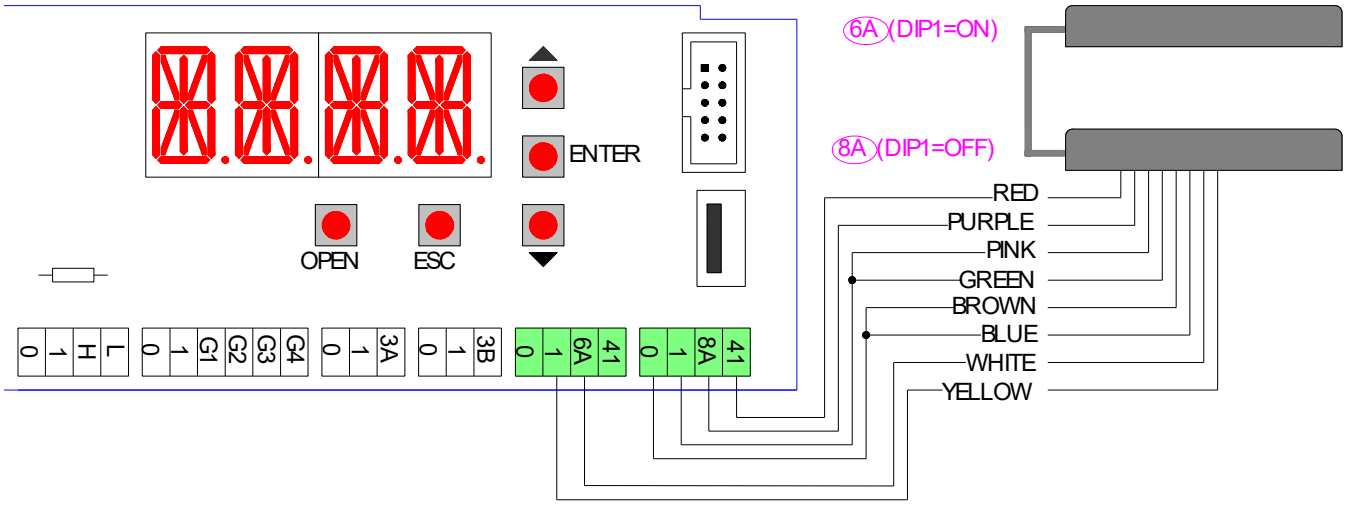

	-	001MR8534, 001MR8570, 001MR8590
SAFETY	0	
	1	Yellow
	6A	White (DIP1=ON)
	41	

	-	001MR8534, 001MR8570, 001MR8590
SAFETY	0	Brown Blue
	1	Green Pink
	8A	Purple (DIP1=OFF)
	41	Red

- OPTION 2: Connect each sensor to the electronic control terminals, as shown below.

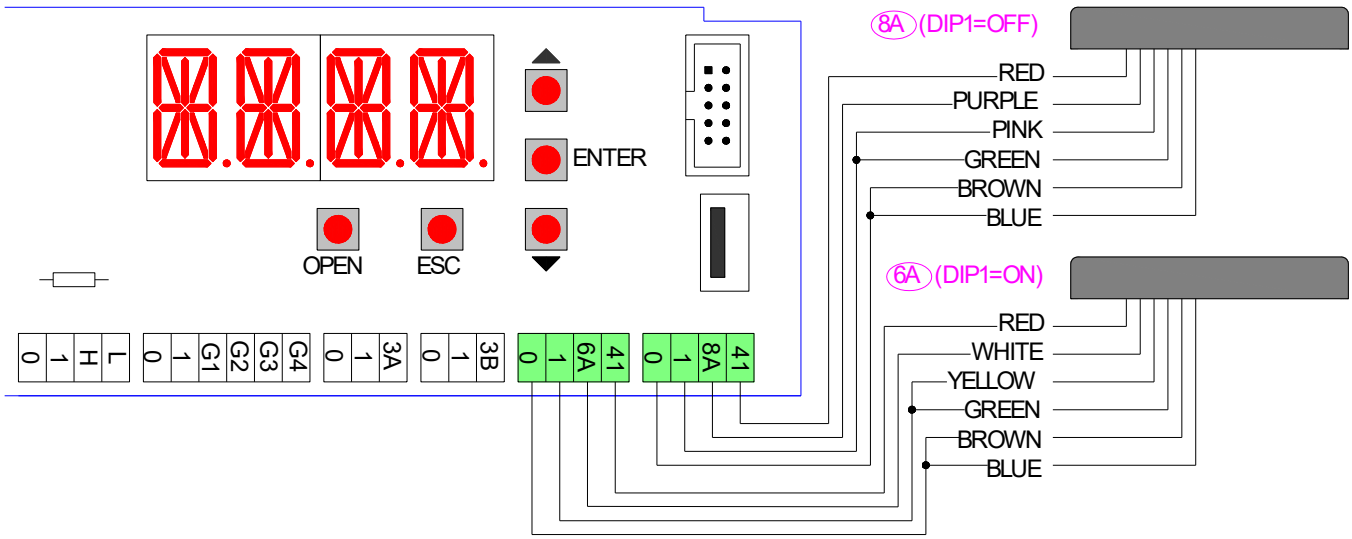

	-	001MR8534, 001MR8570, 001MR8590
SAFETY	0	Brown Blue
	1	Green Yellow
	6A	White (DIP1=ON)
	41	Red

	-	001MR8534, 001MR8570, 001MR8590
SAFETY	0	Brown Blue
	1	Green Pink
	8A	Purple (DIP1=OFF)
	41	Red

For more information, check the installation manual of the sensor.

5.7 ADJUSTMENT OF THE KINETIC ENERGY OF THE DOOR

To reduce the kinetic energy of the door in area B not protected by safety sensors, make the following adjustments.
Adjust the opening speed (VOP) so as to open the door (from 0° to 80°) at the times indicated in the table.
Adjust the closing speed (VCL) so as to close the door (from 90° to 10°) at the times indicated in the table.

OPENING time from 0° to 80°

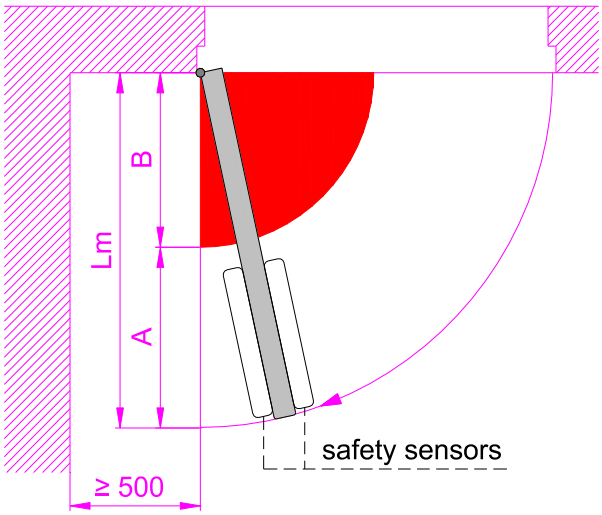

CLOSING time from 90° to 10°

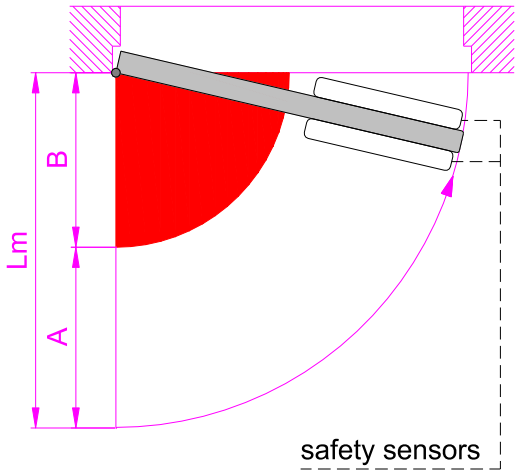

	Time [s]										
	1,0	1,5	2,0	2,5	3,0	3,5	4,0	4,5	5,0	5,5	6,0
	B [m]										
	0,16	0,24	0,32	0,40	0,48	0,56	0,64	0,72	0,80	0,88	0,95
Lm [m]	A [m]										
0,7	0,54	0,46	0,38	0,30	0,22	0,14	0,06	-	-	-	-
0,8	0,64	0,56	0,48	0,40	0,32	0,24	0,16	0,08	-	-	-
0,9	0,74	0,66	0,58	0,50	0,42	0,34	0,26	0,18	0,10	0,02	-
1,0	0,84	0,76	0,68	0,60	0,52	0,44	0,36	0,28	0,20	0,12	0,05
1,1	0,94	0,86	0,78	0,70	0,62	0,54	0,46	0,38	0,30	0,22	0,15
1,2	1,04	0,96	0,88	0,80	0,72	0,64	0,56	0,48	0,40	0,32	0,25
1,3	1,14	1,06	0,98	0,90	0,82	0,74	0,66	0,58	0,50	0,42	0,35
1,4	1,24	1,16	1,08	1,00	0,92	0,84	0,76	0,68	0,60	0,52	0,45
1,5	1,34	1,26	1,18	1,10	1,02	0,94	0,86	0,78	0,70	0,62	0,55

5.8 ELECTRICAL CONNECTIONS OF ELECTRIC LOCK

Automations for swing doors are compatible with most of the electric locks available in the market. Verify that power supply of the electric lock is 12Vdc (1 A max) or 24Vdc (0,5 A max).
- Connect the electric lock to terminals LK + and –LK of the electronic control.
- Set the electric lock power supply, using menu: ADV > LKPW > 12Vdc or 24Vdc.
- Set the type of electric lock operation, using menu: ADV > ELLK > LOCK or SAFE/AUTO.
- Set the operating time of the electric lock, using menu: ADV > TRLK > from 0,5 to 5,0 seconds.
- Set the start of the door opening delay time, using menu: ADV > TALK > from 0,5 to 5,0 seconds.

In the figure are shown the timing of the electric lock operation:
A = start of opening pulse and electric lock power supply on/off,
B = start of door opening,
C = end of electric lock power supply on/off.

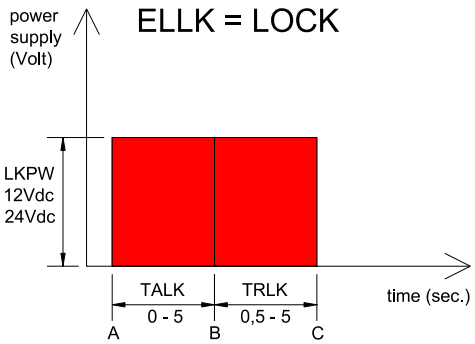

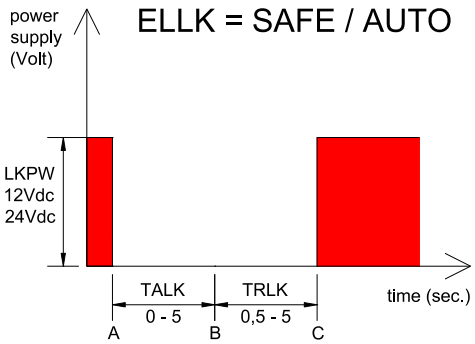

5.9 ELECTRICAL CONNECTION OF A DOOR WITH 2 LEAVES

To coordinate the operation of two automatic swing doors with the closing overlap of the leaves (see figure), procedures as follows.

Using a 3-wire cable (1-H-L), connect the 2 automations MASTER-SLAVE, as shown in the figure.

Using the menu of the electronic control, set: ADV> SYNC> MST1 on MASTER automation and ADV> SYNC> SLV1 on SLAVE automation.

Connect the opening sensors as described in chapter 5.5 and connect the safety sensors as described in chapter 5.6.

If desired, connect the function selector, as shown in the figure.

Note: the partial opening of only one leaf is referred to the MASTER automation.

Note: it is intended that the two leaves shall be installed with the same configuration (e.g. safety sensors, or low energy setting)

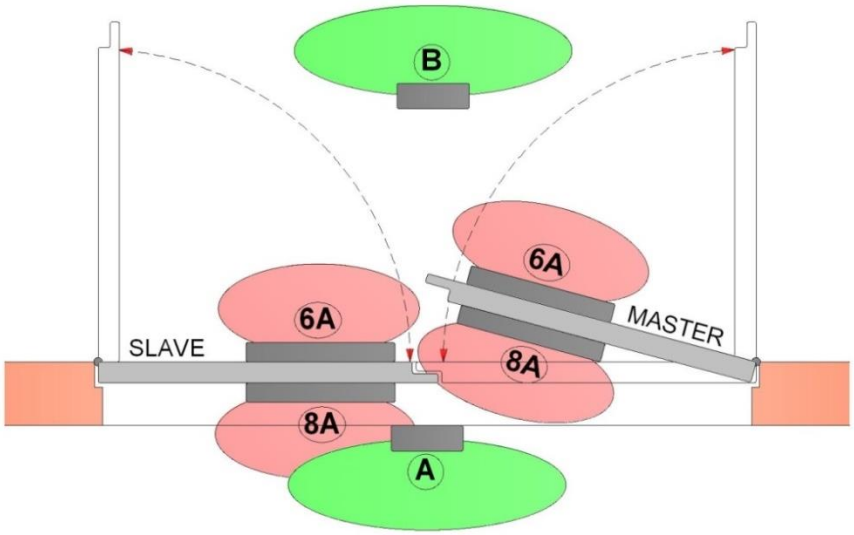

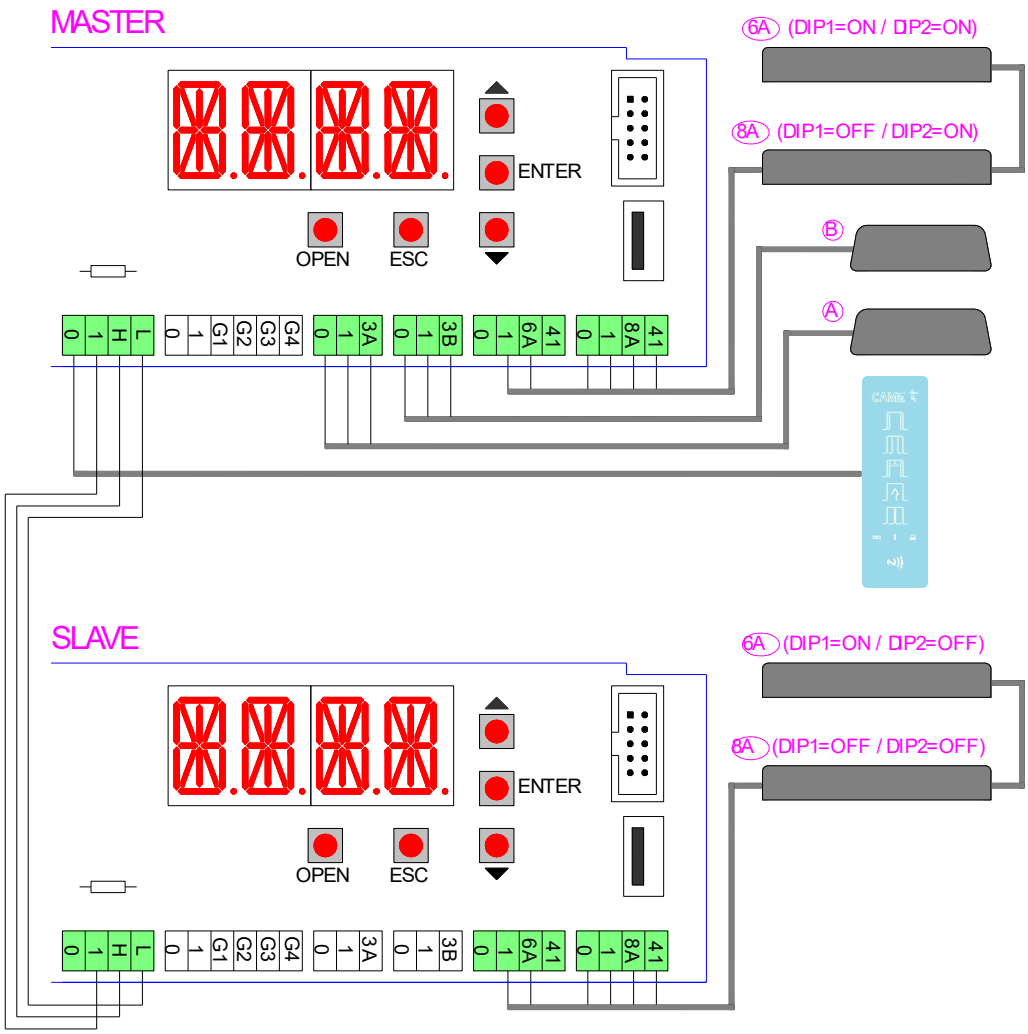

5.10 LOW ENERGY OPERATING MODE

Attention: the FLUO-SWS3 automation can be used in "Low energy" mode, without the installation of safety sensors, only in the absence of users: elderly, infirm, disabled people, small children.

To reduce the force and the kinetic energy of the door, make the following adjustments.

	818XA-0069 (cap. 4.1)	818XA-0070 (cap. 4.2)	818XA-0071 (cap. 4.3)
- Adjustment of the closing spring	minimum	about 10 mm, so as to obtain the closing of the door	minimum
- Adjustment of the small spring	minimum	minimum	minimum
- Adjustment of the closing spring braking, using the BRAKE connector	BRAKE = H (high braking)	BRAKE = H (high braking) If the door weight exceeds 90 kg: BRAKE = MAX (maximum braking)	BRAKE = H (high braking)
- Motor force setting, via menu	PUSH ≤ 5	PUSH ≤ 5	PUSH ≤ 5

- Adjust the opening speed (VOP) so as to open the door (from 0° to 80°) at the times indicated in the table, according to standard EN 16005.

- Adjust the closing speed (VCL) so as to close the door (from 90° to 10°) at the times indicated in the table, and from 10° to fully closed in not less than 1,5 s, according to standard EN 16005.

	Door weight [kg]				
	50	60	70	80	90
Lm [m]	**Time [s]**				
0,75 m	3,0	3,0	3,0	3,0	3,5
0,85 m	3,0	3,0	3,5	3,5	4,0
1,00 m	3,5	3,5	4,0	4,0	4,5
1,20 m	4,0	4,5	4,5	5,0	5,5

5.11 MANUAL OPERATING MODE - POWER ASSIST

Attention: the FLUO-SWS3 automation can be used in "Power assist" mode, only in the absence of users: elderly, infirm, disabled people, small children.

To choose the manual operating mode, set from the menu: ADV > HAND = MIN / MAX.

The "Power assist" manual operation is activated by manually pushing the swing door; any safety sensors are deactivated and the door is opened manually and closes by means of the closing spring in low energy mode (low energy settings for closing shall follow the information in chapter 5.10).

If an opening command is given, the safety sensors are reactivated.

5.12 EMERGENCY EXIT

The FLUO-SWS3 automation for swing doors is suitable for use as an escape route and emergency exit, by adjusting the closing spring to the minimum, so as to obtain the closing of the door.

Any locks installed must comply with the specific applicable standards.

6. ELECTRONIC CONTROL ADJUSTEMENT

The electronic control has 4 buttons and 4 alphanumeric displays to set all the necessary adjustments.
After turning on the electronic control, the display shows the word "MENU". The operation of the four keys are indicated in the table.

Keys	Description
ENTER	Select button, each time you press the button you enter on the selected parameter. Save button, pressing for 1 seconds you "SAVE" the selected value. MENU = Main parameters menu ADV = Advanced parameters menu SEL = Function selector menu MEM = Memory management menu INFO = Information and diagnostics menu
ESC	Exit button, exit from all the parameter or exit from the menu.
↑	Scroll button, each press selects a menu item or increases the value of the selected item.
↓	Scroll button, each press selects a menu item or reduces the value of the selected item.
↑ + ↓	To turn upside down the display, press the two scroll buttons simultaneously for 3 seconds.

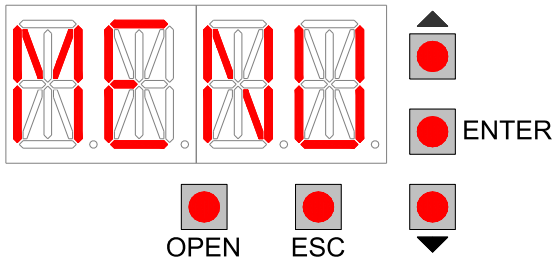

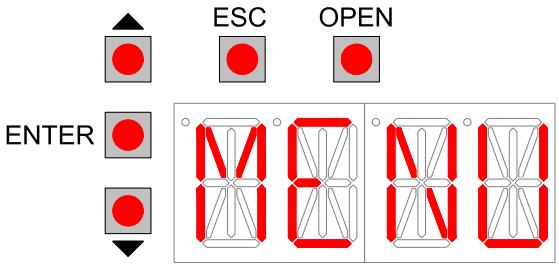

6.1 MENU (BASIC SETTINGS MENU)

Using the buttons ↑ and ↓ choose MENU, press ENTER to select and adjust the following parameters.

Display	Description	Factory settings
DOOR DOOR TYPE	Setting the automation type. Choose between the following values: 80S = do not use 80S1 = FLUO-SWS3 automation	80S1
ARM ARM TYPE	Setting the type of arm. Choose between the following values: SA = sliding arm to pull SA1 = sliding arm to push AA = articulated arm to push	SA
VOP OPENING SPEED	Opening speed setting. Choose between the minimum and maximum: minimum value = 15 deg/s maximum value = 70 deg/s	50
VCL CLOSING SPEED	Closing speed setting. Choose between the minimum and maximum: minimum value = 15 deg/s maximum value = 50 deg/s	30
TAC CLOSING TIME	Open door time setting. Choose between the minimum and maximum: NO = the door is always open minimum value = 1 s maximum value = 30 s	1
PUSH MOTOR POWER	Force setting. Choose between the minimum and maximum: minimum value = 1 maximum value = 10	10
LEAF DOOR WEIGHT	Setting the weight of the door. Choose between the following values: NO = without door MIN = light door MED = medium door MAX = heavy door	MED
RAMP ACCELERATION	Set the door acceleration. Choose between the following values: SLOW = slow acceleration MED = medium acceleration FAST = fast acceleration	MED

Display	Description	Factory settings
BTMD BATTERY MODE	Setting operation of battery power device, in absence of electricity. Choose between the following values: NO = battery not connected EMER = emergency open CONT = continuation of normal operation of the door, with last cycle of opening Note: the number of operations with battery, depends on the efficiency of the battery, the weight of the doors and the present friction. FIRE = priority closing of the door for fire alarm.	NO
Note: If the automatic door is turned off for long periods, disconnect the battery from the electronic board.		

6.2 ADV (ADVANCED PARAMETERS MENU)

Using the buttons ↑ and ↓ select ADV, press ENTER to select and adjust the following parameters.

Display	Description	Factory settings
8AEX 8A-EXCLUSION	Exclusion of the operation of the sensor closing safety. Choose between the minimum and maximum values: minimum value = 0% maximum value = 50%	0
6AEX 6A-EXCLUSION	Exclusion of the operation of the sensor opening safety. Choose between the minimum and maximum values: minimum value = 0% maximum value = 50%	0
ST6A 6A-SETTING	Operation of 6A safety command, after the door stop. Choose between the following values: CLOS = automatic closing of the door OPEN = continues the opening of the door	CLOS
ELLK LOCK OPERATION TYPE	Selecting the electric lock. Choose between the following values: NO = electric lock not connected LOCK = standard electric lock (security operation) SAFE = electromagnet (safety operation) AUTO = electromagnet (operation matched to the function selector) OPEN = electromagnet for open door	NO
LKPW LOCK POWER SUPPLY	Power supply electric lock. Choose between the following values: 12 = 12V electric lock 24 = 24V electric lock	12
TALK LOCK ADVANCE TIME	Time advance operating electric lock. Choose between the minimum and maximum values: minimum value = 0 s maximum value = 5 s	0.5
TRLK LOCK OPERATION TIME	Operating time of the electric lock. Choose between the minimum and maximum values: minimum value = 0,5 s maximum value = 5 s	0.5
LKSH LOCK HOOKING	Setting of closing push for hooking the electric lock. Choose between the following values: NO = no push MIN = light push MED = medium push MAX = heavy push	NO
PUCL PUSH DOOR CLOSED	Setting the push on the closed mechanical stop. Choose between the following values: NO = no push MIN = light push MED = medium push MAX = heavy push XMAX = very heavy push	NO
PIPP PUSH DOOR OPEN	Setting of the opening push. Choose between the following values: NO = no push YES = push enabled (disabled with ANG)	NO
HOLD HOLD DOOR OPEN	Setting the push of keeping the door open. Choose between the following values: NO = no push MIN = light push MED = medium push MAX = heavy push	MED

Display	Description	Factory settings
HAND MANUAL OPERATION	Manual operation of the door in power-assisted mode or with push opening. Choose between the following values: NO = disabled manual operation power-assisted MIN = minimum manual operation power-assisted (Note: the safety devices are disabled) MAX = maximum manual operation power-assisted (Note: the safety devices are disabled) PUGO = push opening enabled	MAX
ANG OPENING ANGLE	Selecting of the door opening angle. Choose between the following values: NO = the door opens up to the mechanical opening stop 50 … 240 = the door opens up to the selected angle (minimum angle = 50) Note: the value indicated refers to the arm angle and not to the door angle	NO
TAKO KO-CLOSING TIME	Open door time setting, after the 1-G1/G2/G3/G4 command (see menu settings: ADV > STG1/STG2/STG3/STG4 = KO/KO2). Choose between the minimum and maximum: NO = see MENU > TAC minimum value = 1 s maximum value = 30 s	NO
MOT MOTOR CIRCUIT	Setting the manual friction of the door, by means of the electrical connection of the motor windings. Choose between the following values: OC = manual door opening without friction (motor with open circuit windings) SC = manual door opening with friction (motor with short-circuit windings)	OC
T41 SAFETY TEST	Enable test for safety devices (in accordance with EN 16005). Choose between the following values: NO = test disabled YES = test enable	YES
SYNC DOOR SYNCHRO-NIZATION	Door with 2 leaves, setting of master-slave synchronization. Choose between the following values: NO = no synchronization (door with 1 leaf) MST1 = automation MASTER which opens first SLV1 = automation SLAVE which closes first MST2 = external automation MASTER which opens first (see menu: ADV > INK > EXT) SLV2 = external automation SLAVE which closes first (see menu: ADV > INK > EXT)	NO
SDLY DOOR DELAY	Door with 2 leaves, setting of delay of movement between Master-Slave. Choose between the following values: NO = leaves without overlap MIN = minimum delay MED = medium delay MAX = maximum delay	MED
INK INTER-LOCKED DOOR	Interlocked operation of two automatic doors, the opening of a door is permitted only when the other door is closed. Choose between the following values. NO = no interlock INT = internal door EXT = external door	NO
ID IDENTIFICATION NUMBER	If several automations are connected to the network via the 1-H-L terminals, they must have different identification numbers. Choose between the following values: NO = no network 0 / 1 / 2 / 3 / 4 / 5 / 6 / 7 / 8 / 9 / 10 / 11 / 12 / 13 / 14 N.B. After changing the ID, turn the automation off and on again.	NO
SPR SPRING OPERATION	Select the type of spring operation. CLOS = the spring closes the door OPEN = the spring opens the door (NOT AVAILABLE)	CLOS
PC CLOSING PUSH	Independent setting of the closing force. Choose between the following values: NO = see MENU > PUSH (same force in opening and closing) minimum value = 1 maximum value = 10 Note: if necessary, the closing force (PC) can be set differently from the opening force (PUSH), for example for doors with Low Energy operation, as indicated in chapter 5.10.	NO

Display	Description	Factory settings
STG1 G1-SETTING **STG2** G2-SETTING	**INPUT COMMANDS BETWEEN 1-G1 AND 1-G2 TERMINALS.** Choose between the following values. NO = no function KO = opening command KO2 = semi-priority opening command (not active with function selector in closed door) KC = closing command (N.O.) FIRE = Priority closing command (N.C.), for fire alarm VOPN = N.O. opening limit-switch STEP = Step-by-step contact N.O. The closing of the contact performs in sequence the opening (disabled automatic closure) and the closing of the door. SAM = Automatic setting command of function selector. The closing of the contact changes the function selector mode (see menu: SEL > SAM1 and SEL > SAM2). EMER = Emergency opening contact N.C. The opening of the 1-G1 contact opens the door. RSET = reset command CAB = Step-by-step contact N.O. The closing of the contact performs in sequence the closing of the door (disabling 3A/3B terminals, enabling the signaling for occupied cabin) and the opening of the door (enabling 3A/3B terminals, disabling the signaling for occupied cabin). INKE = Interlocked operation exclusion command between two doors (see menu: ADV > INK). PART = Opening command for the MASTER door only (see menu: ADV > SYNC). SUL = Command to unlock the function selector for 10 seconds **OUTPUT SIGNALS BETWEEN 0-G1 AND 0-G2TERMINALS (12Vdc 30mA).** Choose between the following values. BELL = The output is activated for 3 seconds when people enter the store (through the sequential activation of the contacts: 1-3B and 1-3A). SERV = The output is activated when the door reaches the number of maintenance cycles, set using the menu: INFO > SERV. WARN = The output is activated when at least one warning remains active for 5 minutes. For remove the alarm signal make a reset or turn off the power supply. CLOS = The output is activated when the door is closed OPEN = The output is activated when the door is open AIR = The output is activated when the door is not closed LAMP = The output is activated when the door is moving CABS = Signaling of the occupied cabin (see menu: ADV > STG2 > CAB) INK = Red traffic light signaling for interlocked doors (see menu: ADV > INK) PWOF = The output is activated in the absence of power supply (W128) HAND = The output is activated when the door is opened by hand FS = The output is activated when the door is not closed, in the presence of a fire alarm. 3AS = The output is activated when input 3A is not active 3BS = The output is activated when input 3B is not active	NO
STG3 G2-SETTING **STG4** G4-SETTING	**INPUT COMMANDS BETWEEN 1-G3 AND 1-G4 TERMINALS.** Choose between the following values. NO = no function KO = opening command KO2 = semi-priority opening command (not active with function selector in closed door) KC = closing command (N.O.) FIRE = Priority closing command (N.C.), for fire alarm VOPN = N.O. opening limit-switch STEP = Step-by-step contact N.O. The closing of the contact performs in sequence the opening (disabled automatic closure) and the closing of the door. SAM = Automatic setting command of function selector. The closing of the contact changes the function selector mode (see menu: SEL > SAM1 and SEL > SAM2). EMER = Emergency opening contact N.C. The opening of the 1-G1 contact opens the door. RSET = reset command CAB = Step-by-step contact N.O. The closing of the contact performs in sequence the closing of the door (disabling 3A/3B terminals, enabling the signaling for occupied cabin) and the opening of the door (enabling 3A/3B terminals, disabling the signaling for occupied cabin). INKE = Interlocked operation exclusion command between two doors (see menu: ADV > INK). PART = Opening command for the MASTER door only (see menu: ADV > SYNC). SUL = Command to unlock the function selector for 10 seconds	NO

6.3 SEL (FUNCTION SELECTOR MENU)

Using the buttons ↑ and ↓ select SEL, press ENTER to select and adjust the following parameters.

Display	Description	Factory settings
MODE SELECTOR MODE	Displaying of operating mode of function selector device. Choose between the following values: NO = no mode OPEN = open door AUTO = automatic bi-directional operation CLOS = closed door 1D = automatic one-way operation PA = automatic partial operation 1DPA = automatic one-way operation and partial HAND = manual operation	NO
SECL SELECTOR LOCK	How to activate the function selector. Choose between the following values: NO = function selector always accessible LOGO = function selector accessible by selecting the logo for 3 seconds TAG = function selector accessible with badge and numeric code	NO
DLAY DELAY CLOSED DOOR	Setting delay time function closed door. Choose between the minimum and maximum values: minimum value = 1 s maximum value = 5 min	1
TMEM TAG MEMORISE	Saving procedure of badge and numeric code for function selector. Choose between the following values. NO = no saving SMOD = Saving badge and numeric code for activation of the function selector. OPEN = Saving badge and numeric code for activation of priority opening: proceed as SMOD - press the ENTER button for 1 second, the display shows REDY, **818XA-0074** - approach the badge to the function selector (in front of the NFC symbol), the display shows the badge code, **818XA-0075** - press the logo, enter the code (from 1 to 5 numbers), press the logo for confirmation, the display shows the numeric code (Note: the numeric code can be stored only if SECL=TAG), - wait for 2 minutes or press the ESC button. Note: if the badge and the numeric code is not recognized the display shows the message UNKN. You can store a total maximum of 50 badges and numeric codes. APP = do not use	NO
TMAS TAG MASTER	It is possible to create master badge and master numeric code that allows the saving of the badges and the numeric codes, without the use of the menu. Choose from the following values. NO = no saving MMOD = creation of the master badge and master numeric code to saving badges and numeric codes for function selector activation: proceed as SMOD. MOPE = creation of the master badge and master numeric code to saving the badges and numeric codes of opening priority: proceed as OPEN. Note: if the badge and the numeric code is not recognized the display shows the message UNKN. **818XA-0074** - The use of the master badge is the following: - approach the master badge to the function selector (in front of the NFC symbol), the buzzer emits 2 beeps at the beginning of the storage procedure, - approach the badges, that you want to store, one at a time, to the function selector (in front of the NFC symbol), the buzzer emits 1 beep of confirmation storage, - wait for 2 minutes, the buzzer emits 2 beeps at the end of the storage procedure. **818XA-0075** - The use of the master numeric code is the following: - press the logo, enter the master numeric code, press the logo for confirmation, the buzzer emits 2 beeps at the beginning of the storage procedure, - press the logo, enter the new code (from 1 to 5 numbers), press the logo for confirmation,, the buzzer emits 1 beep of confirmation storage, - wait for 2 minutes, the buzzer emits 2 beeps at the end of the storage procedure. Note: if the badge and the numeric code is not stored, the buzzer emits no beeps.	NO

Display	Description	Factory settings
TDEL TAG DELETE	Cancellation procedure of badge and numeric code. Choose between the following values. NO = no cancellation YES = badge and numeric code cancellation - press the ENTER button for 1 second, the display shows REDY, **818XA-0074** - approach the badge to the function selector (in front of the NFC symbol), the display shows the badge code, **818XA-0075** - press the logo, enter the code (from 1 to 5 numbers), press the logo for confirmation, the display shows the numeric code. - wait for 2 minutes or press the ESC button. Note: if the badge and the numeric code is not recognized the display shows the message UNKN.	NO
TERA TAG TOTAL ERASE	How to erase all stored badges and numeric codes. Choose between the following values: NO = no erase YES = cancellation of all badges and numeric codes	NO
SAM1 SELECTOR AUTOMATIC MODE	Changing the function selector function when the 1-G1/G2/G3/G4 contact closes. Activate the SAM mode using the menu ADV > STG1/STG2/STG3/STG4 > SAM. Connect the contact of a clock to 1-G1/G2/G3/G4 terminals, and choose between the following values: OPEN = open door AUTO = automatic bi-directional operation CLOS = closed door 1D = automatic one-way operation HAND = manual operation	CLOS
SAM2 SELECTOR AUTOMATIC MODE	Changing the function selector function when the 1-G1/G2/G3/G4 contact opens Activate the SAM mode using the menu ADV > STG1/STG2/STG3/STG4 > SAM. Connect the contact of a clock to 1-G1/G2/G3/G4 terminals, and choose between the following values: OPEN = open door AUTO = automatic bi-directional operation CLOS = closed door 1D = automatic one-way operation HAND = manual operation	CLOS
FW FIRMWARE UPGRADE	Programming procedure of function selector. Insert the USB memory in the electronic control. From this menu, choose the firmware version you want. Press ENTER until it starts the programming procedure that lasts about 30 seconds (the display shows “WAIT • • • •”), at the end the display shows "SAVE". After the procedure, remove the USB memory from the electronic control and store it for future use. Note: in the case of programming error or missing firmware (W103), proceed as follows: disconnect the power supply, insert the USB memory, give power supply, and repeat the programming procedure from this menu.	- - - -
VER VERSION	Displaying the firmware version of function selector (eg = 0435).	- - - -
TIN TAG INPUT	You can upload the badges and numeric codes used in another automation, already stored in the USB memory. Choose between the following values: NO = no upload YES = upload the badges and numeric codes from the USB memory	NO
TOUT TAG OUTPUT	You can save the stored badges and numeric codes in the USB memory. Choose between the following values: NO = no save YES = save the stored badges and numeric codes in the USB memory	NO

6.4 MEM (MEMORY MANAGEMENT MENU)

Using the buttons ↑ and ↓ select MEM, press ENTER to select and adjust the following parameters.

Display	Description	Factory settings
FSET FACTORY SETTINGS	Restore all settings to factory defaults. Choose between the following values: NO = no restore. YES = restore to factory settings.	NO
FW FIRMWARE UPGRADE	Programming procedure of electronic control. Insert the USB memory in the electronic control. From this menu, choose the firmware version you want. Press ENTER until it starts the programming procedure that lasts about 30 seconds (the display shows “WAIT • • • •”), at the end the display shows "SAVE". After the procedure, remove the USB memory from the electronic control and store it for future use. Note: in the case of programming error or missing firmware (W100), proceed as follows: disconnect the power supply, insert the USB memory, give power supply, the programming procedure starts automatically.	- - - -
SIN SETTING INPUT	You can upload the menu settings used in another automation, already stored in the USB memory. Choose between the following values: NO = no upload YES = upload the menu settings from the USB memory	NO
SOUT SETTING OUTPUT	You can save the menu settings of automation in use, in the USB memory. Choose between the following values: NO = no save YES = save the menu settings of automation in the USB memory	NO

6.5 INFO (INFORMATION AND DIAGNOSTICS MENU)

Using the buttons ↑ and ↓ select INFO, press ENTER to select and adjust the following parameters.

Display	Description	Factory settings
VER VERSION	Displaying the firmware version of electronic control (eg = 0120).	- - - -
CYCL CYCLES	Shows the number of cycles of the door (1 = 1.000 cycles, 9000 = 9.000.000 cycles).	0000
SERV SERVICE SIGNAL	Enabling the signaling of routine maintenance of the door. NO = no signaling 1 = 1.000 cycles / 9000 = 9.000.000 cycles	0000
LOG INFO OUTPUT	You can save the following information in the USB memory (sw80_log.txt): the last 20 warnings, the menu settings, and the electronic devices connected to automation. Choose between the following values: NO = no save YES = save the information in the USB memory	NO
WARN WARNING LIST	Displaying of the last 10 warnings (the warning number 0 is the last): 0.xxx / 1.xxx / 2.xxx / 3.xxx / 4.xxx / 5.xxx / 6.xxx / 7.xxx / 8.xxx / 9.xxx	0. - - -

DISPLAY	SEL	FLASH	WARNING	CHECK
W001	i	1	Encoder error	Check encoder connection
W002	i	1	Motor short circuit	Check the connection of the motor
W003	i	1	Motor control error	Electronic control failure
W010	i	2	Direction reversed	Check the presence of obstacles
W011	i	2	Running too long	Check the connection between the motor and leaf
W012	i	2	Running too short	Check the presence of obstacles
W013	i	2	Overrun	Check the mechanical stops
W100	-	-	Programming error	Repeat the programming procedure in MEM > FW menu
W103	-	-	Programming error Selector	Repeat the programming procedure in SEL > FW menu
W127	-	-	Automation reset	The automation performs a self-test
W128		on	No power supply	Check the power supply
W129		1	No battery	Check the battery connection
W130		1	Low Battery	Replace or recharge the battery
W140	i	3	6A safety test failure	Check the safety sensor connection
W142	i	3	8A safety test failure	Check the safety sensor connection
W145	i	4	Motor overtemperature (first step)	The door reduces the speed
W146	i	4	Motor overtemperature (second step)	The door stops
W150	i	2	Obstacle in opening	Check the presence of obstacles
W151	i	2	Obstacle in closing	Check the presence of obstacles
W152	i	2	Door locked open	Check the presence of locks
W153	i	2	Door locked closed	Check the presence of locks
W156	i	2	Door moved manually	Wait about 5 seconds
W160	i	1	Synchronization error	Check the ADV > SYNC and the ADV > INK menu
W256	i	-	Power on	-
W257	i	-	Firmware update	-
W320	i	on	Signaling of maintenance	Check the INFO > SERV menu
W330	i	1	Tuning between motor and electronics	Wait about 3-30 seconds

7. START-UP PROCEDURE OF THE AUTOMATIC SWING DOOR

7.1 Preliminary checks.

At the end of the installation, move the doors manually and make sure that operation is smooth and without friction. Check the solidity of the structure and the proper attachment of all the screws. Check the correctness of all electrical connections. Make sure you have installed the mechanical stop of the open door.

Before connecting any security devices, leave the jumper on terminals safety (41-6A, 41-8A).

7.2 Giving power supply and connect the battery, if present.

Note: every time you switch on the automation performs a self-test (from 3 to 30 seconds). The first opening and closing cycle is at low speed to allow the automatic learning.

To ensure that the electronic control has the factory settings, restore via the menu:

MEM> FSET> YES (confirm by pressing ENTER for 1 second).

If the door is with articulated arm to push, set as follow: MENU > ARM > AA.

If the door is with sliding arm to push, set as follow: MENU > ARM > SA1.

Perform the menu settings as described in Chapter 6. Use OPEN button to perform the opening door, and verify the correct operation of the door.

Note: the automation automatically detects any obstacles during the closing movement (reversal movement) and opening (stopping movement).

If present, connect the electric lock of the door to the terminals (-LK \ +LK) of electronic control, and make the settings available in the ADV menu. described in Chapter 5.8.

7.3 Connect one at a time, control and safety devices to protect the opening and closing cycle of the door, as described in Chapter 5.6, and verify proper operations.

Note: verify that the opening access is properly protected by safety sensors, in accordance with the requirements of the European standard EN16005 (annex C), or make speed adjustments in accordance with European standards EN16005 (Annex G), as shown in chapter 5.7.

7.4 If the risk assessment of the door allows protection through Low Energy, make the adjustments in accordance with the prescriptions of the European standard EN16005 (Annex F1), as indicated in chapter 5.10.

7.5 At the end of the automation starting, deliver to the owner the user instructions, including all warnings and information necessary to maintain the security and functionality of the automatic door.

The automations are supplied with a label containing the data required by the European standards EN16005 and EN60335-2-103.

Note: the manufacturer of the automatic swing door has to add his own label identifying the installation.

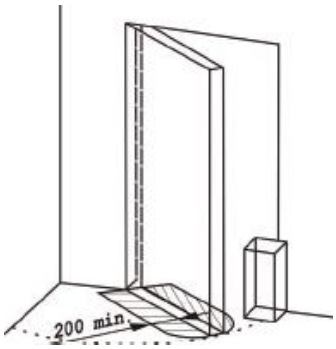

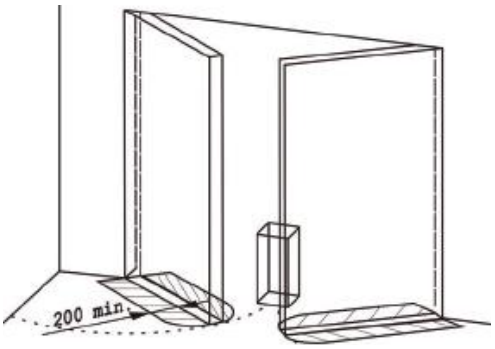

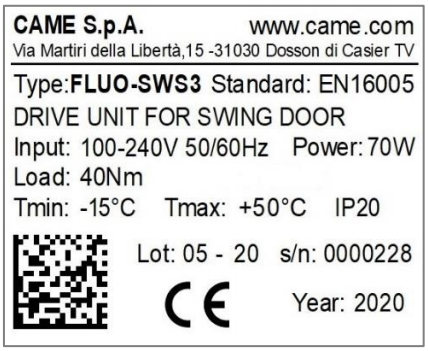

8. TROUBLESHOOTING

In addition to the following list of possible problems, there are warnings provided by the display, as described in chapter 6.5.

Problem	Possible causes	Remedy
The automation does not open or close.	No power supply (display off).	Check the power supply.
	Short circuited external accessories.	Disconnect all accessories from terminals 0-1 and reconnect them one at a time (check for voltage 12V).
	The door is locked by bolts and locks.	Check the freely move of the doors
The automation does not perform the functions set.	Function selector incorrectly set.	Check and correct the settings of the function selector.
	Control devices or safety always activated.	Disconnect devices from the terminal and verify the operation of the door.
The movement of the doors isn't linear, or reverse the movement for no reason.	The automation does not successfully perform the automatic learning.	Perform a reset or power off and power on the automation.
The automation opens but does not close	Anomalies during the safety devices test.	Jumper contacts one at a time 41 -6A, 41 - 8A.
	The opening devices are activated.	Verify that the opening sensors are not subject to vibration, do not perform false detections or the presence of moving objects in the field of action.
	The automatic closing doesn't work.	Check the settings of the function selector.
Safety devices not activating.	Incorrect connections between the safety devices and electronic control.	Check that the safety contacts of the devices are properly connected to the terminal blocks and the relative jumpers have been removed.
The automation opens by itself.	The opening and safety devices are unstable or detect moving bodies	Verify that the opening sensors are not subject to vibration, do not perform false detections or the presence of moving bodies in the field of action.

9. AUTOMATIC SWING DOOR ROUTINE MAINTENANCE PLAN

To ensure proper operation and safe use of the automatic swing door, as required by European standard EN16005, the owner has to perform routine maintenance by qualified personnel.

Except for routine cleaning of the door, the responsibility of the owner, all maintenance and repair work must be carried out by qualified personnel.

The following table lists tasks related to routine maintenance, and the frequency of intervention related to an automatic swing door operation with standard conditions. In the case of more severe operating conditions, or in the case of sporadic use of the automatic swing door, the frequency of maintenance can be consistently adequate.

Task	Frequency
Remove the power supply, open the automation and perform the following checks and adjustments. - Check all screws fastening of components within the automation. - Check the state of wear of the hinges (if necessary replace them). - Verify correct mounting of the arm on the door. - Check the correct force of the closing spring, and low energy setting if used. - If present, verify proper engagement of the electric lock.	Every 6 months or every 200.000 cycles.
Connect the power supply and perform the following checks and adjustments. - Check the correct operation of the control and safety devices. - Check the Low energy operation if used. - Check the detection area of the security sensors complies with the requirements of the European standard EN16005. - If present, verify the correct operation of the electric lock. - If present, verify the correct operation of the battery power device (if necessary replace the battery).	Every 6 months or every 200.000 cycles. Note: the EN16005 European standard requires the verification of the safety functions of the automation and of the safety devices at least once a year.

All maintenance, replacement, repair, update, etc.. must be written into the proof book, as required by European standard EN16005, and delivered to the owner of the automatic swing door.

For repairs or replacements of products, original spare parts must be used.

9.1 DISPOSAL OF PRODUCTS

The packaging materials (cardboard, plastic, and so on) should be disposed of as solid household waste, and simply separated from other waste for recycling.

Our products are made of various materials. Most of these (aluminum, plastic, iron, electrical cables) are classified as solid household waste. They can be recycled by separating them before dumping at authorized city plants.

Whereas other components (control boards, batteries, and so on) may contain hazardous pollutants.

These must therefore be disposed of by authorized, certified professional services.

Before disposing, it is always advisable to check with the specific laws that apply in your area.

DO NOT DISPOSE IN THE ENVIRONMENT.

CAME

CAME.COM

CAME S.P.A.
Via Martiri Della Libertà, 15
31030 Dosson di Casier - Treviso - Italy
tel. (+39) 0422 4940 - fax. (+39) 0422 4941