3.1a

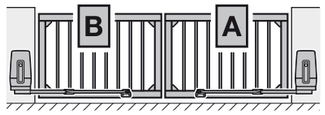

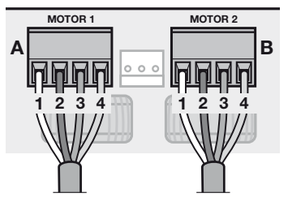

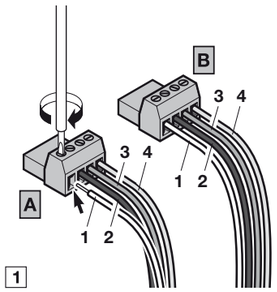

1

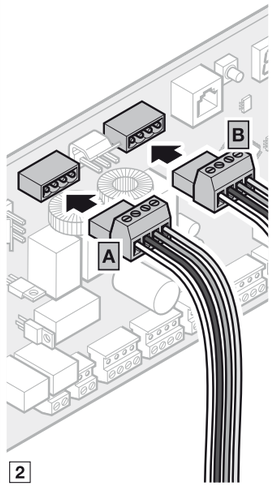

2

3.1b

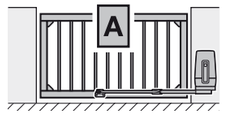

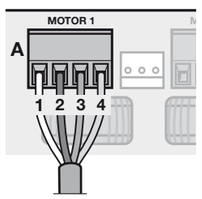

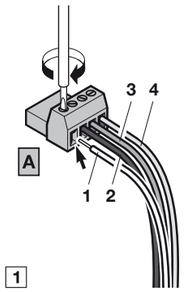

1

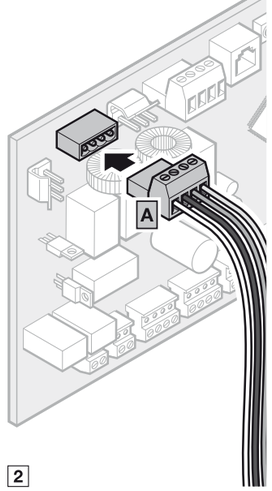

2

3.2

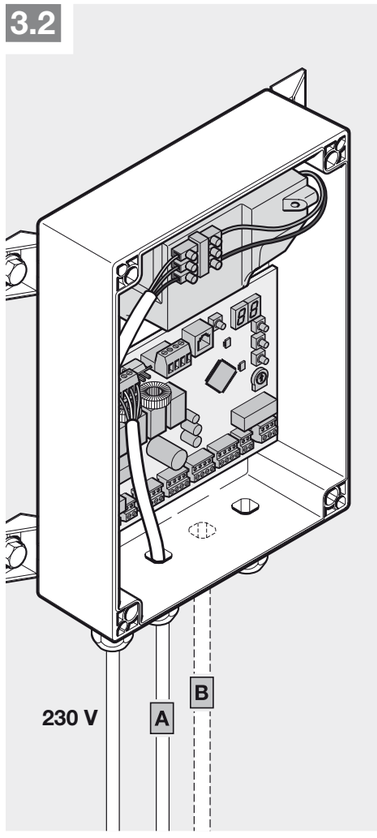

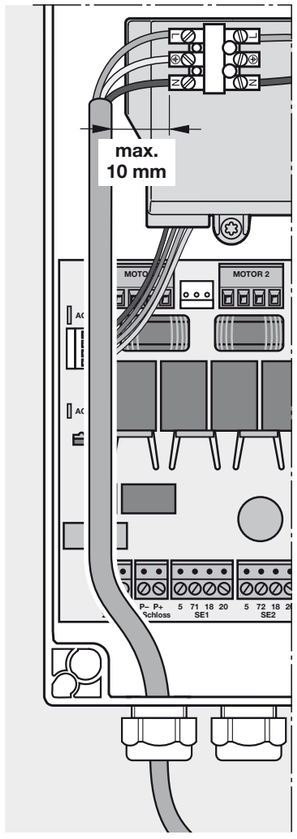

1

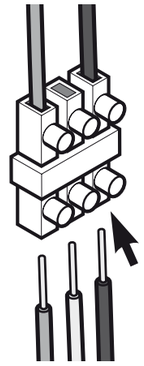

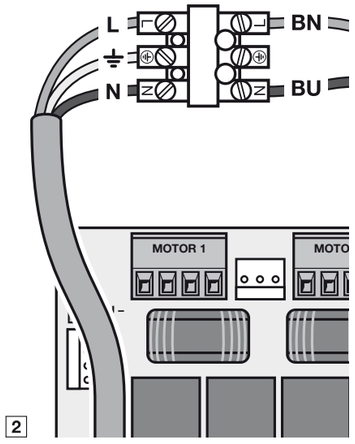

2

TR30A098 RE / 12.2016

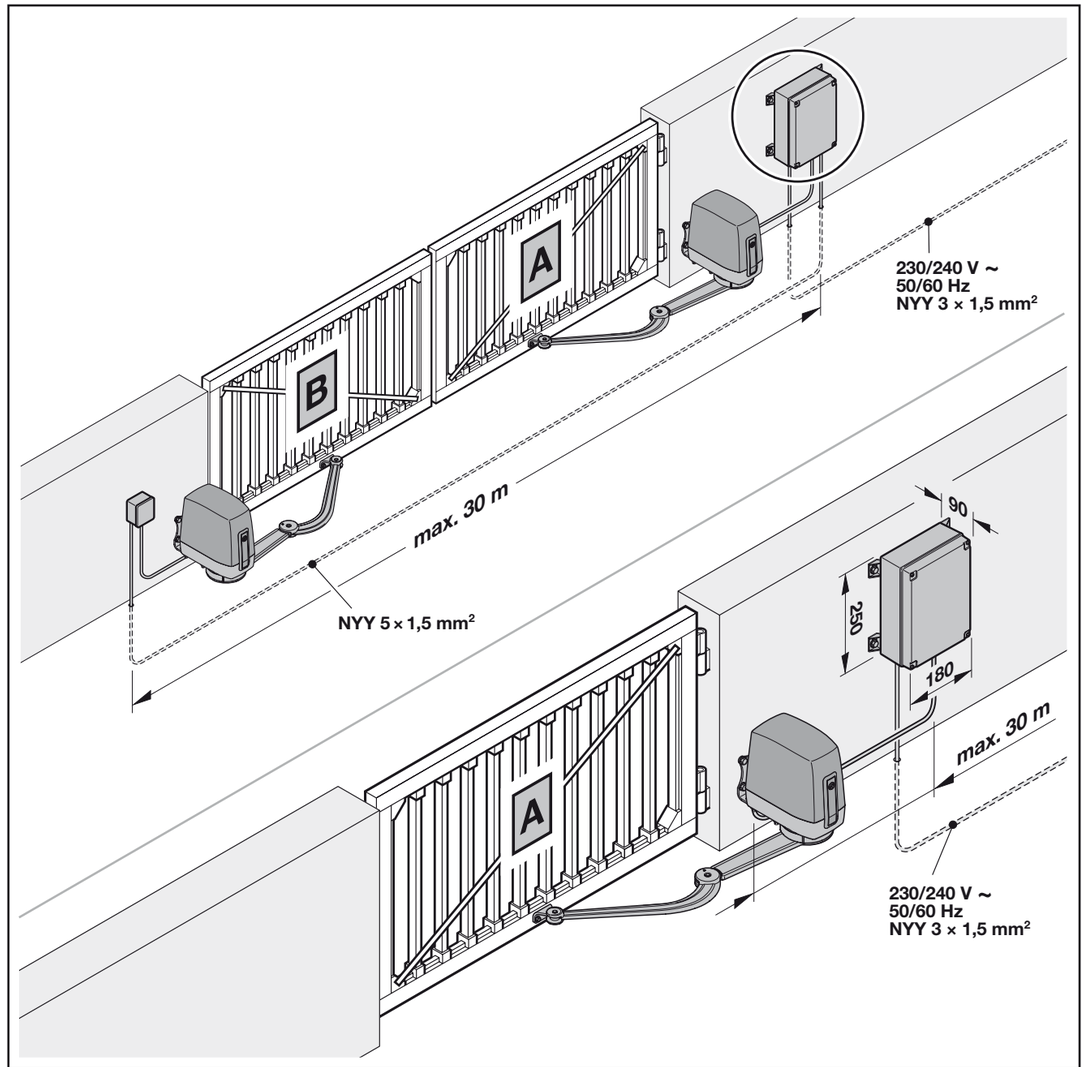

1

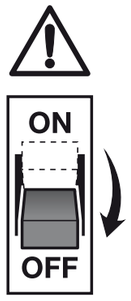

1

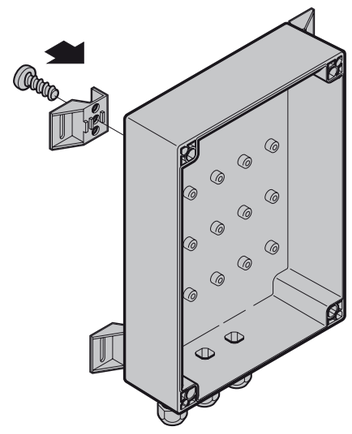

2

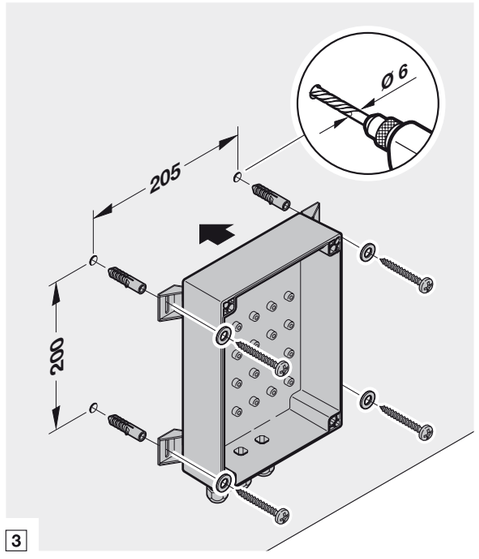

3

TR30A098 RE / 12.2016

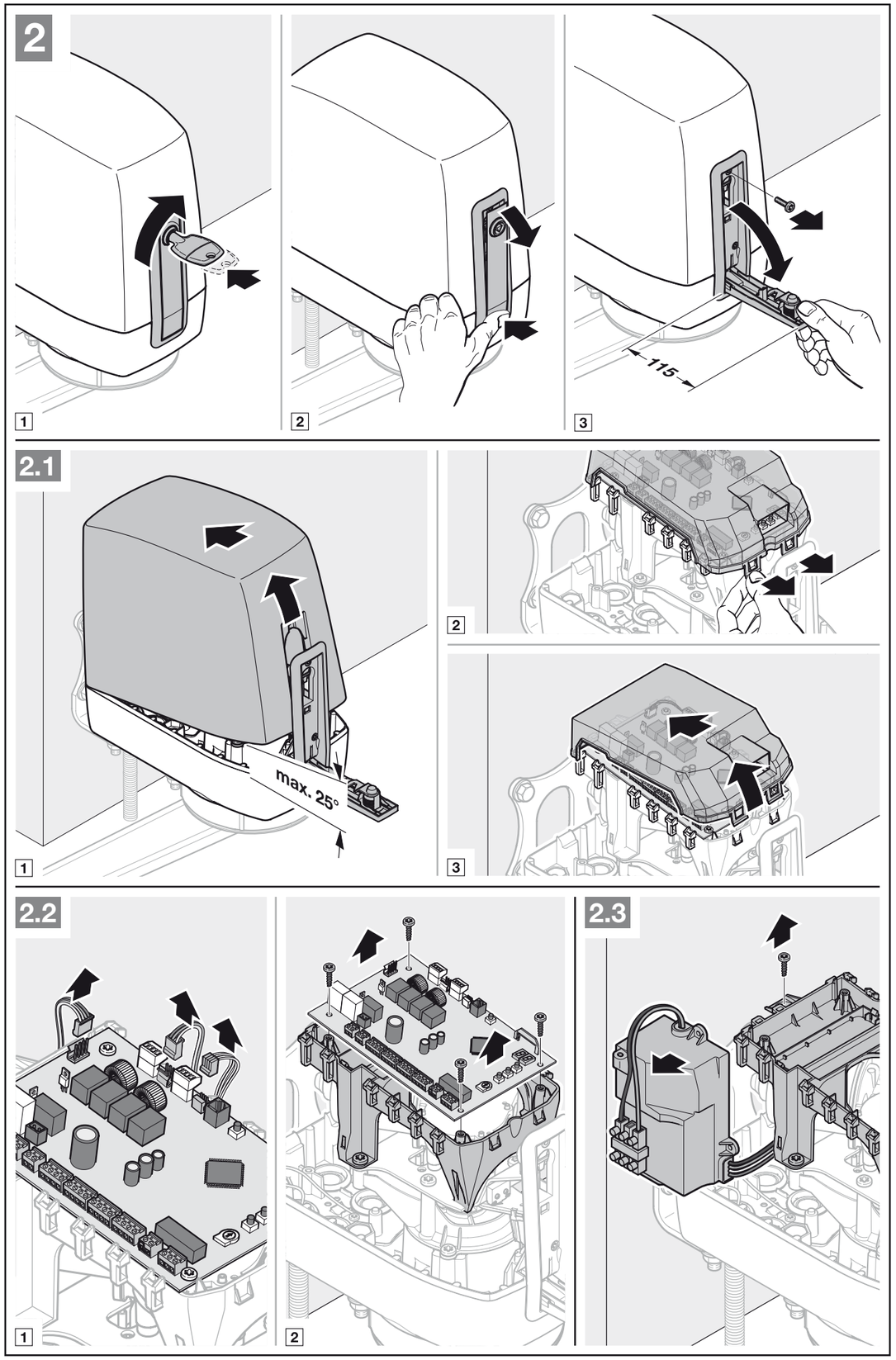
2
1
2
3
115
2.1
1
max. 25°
2
3
2.2
1
2
2.3

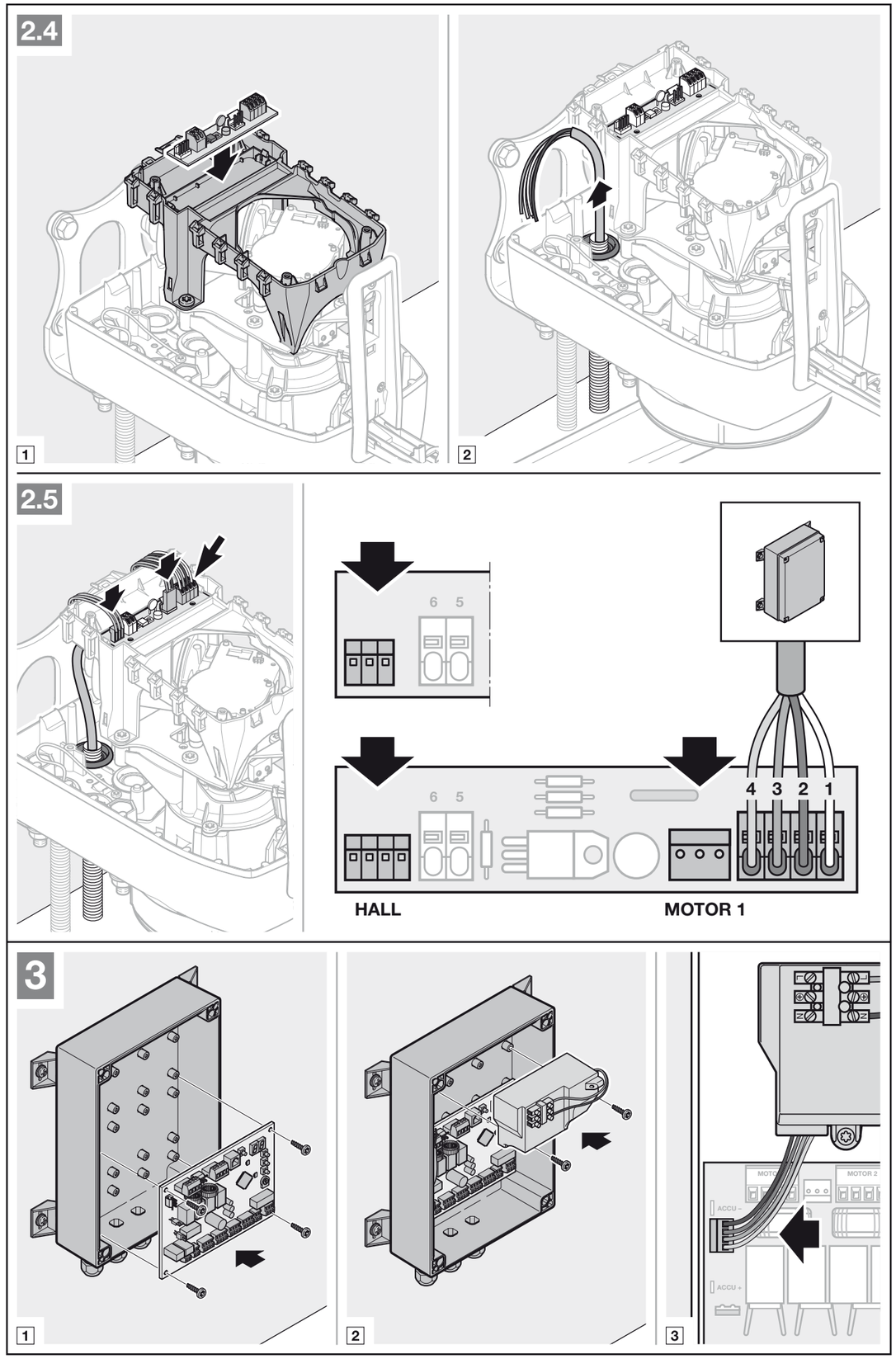
2.4
1
2
2.5
6 5
6 5
4 3 2 1
HALL
MOTOR 1
3
1
2
3
MOTOR 2
ACCU –
ACCU +